ZR-M Vertical/Rotational Axis Integrated Type, Medium size type, 200W

■ Model

ZR	-	M	-	□	-	200	-	20	-	200	-	T2	-	□	-	B	-	L
Series	–	Type	–	Encoder Type	–	Motor Type	–	Z-axis lead	–	Z-axis stroke	–	Applicable Controller	–	Cable Length	–	Options		

- Encoder Type: A: Absolute, I: Incremental
- Motor Type: 200:200W
- Z-axis lead: 20:20mm
- Z-axis stroke: 200:200mm
- Applicable Controller: T2:XSEL-P/Q
- Cable Length: N: None, S: 3m, M: 5m, X□□: Specified Length
- Options: B: Brake (standard feature), L: Limit switch (standard feature on rotational axis)

Models/Specifications

Model	Axis Configuration	Encoder Type	Motor Capacity (W)	Operation Range	Positioning Repeatability (mm)	Maximum Operating Speed (note 1)	Loading Capacity (kg)		Vertical Axis Push force (N)		Rotational Axis Allowable load	
							Rated (note 2)	Max (note 2)	Push motion operation (note 3)	Max thrust (note 3)	Allowable inertial moment (kg·m²)(note 4)	Allowable torque (N · m)
ZR-M-① -200-20-200-T2-②-B-L	Vertical axis	Absolute	200	200mm	±0.010	1256mm/s	2	6	120	171	0.03	3.8
	Rotational axis	Incremental	200	±360°	±0.005	2200°/s						

* In the above model name, ① indicates the encoder type, while ② indicates the cable length.

Options

Name	Option code	Remarks
Brake	B	Standard feature on vertical axis/rotational axis
Home Limit Switch	L	Standard feature on rotational axis

* The following adjustment jig (sold separately) is required for the absolute specification.
Absolute reset adjustment jig (model: JG-ZRM)

Actuator Specifications

Encoder type	Absolute / Incremental
Actuator weight	8kg
Applicable controller	T2 : XSEL-P/Q
Cable Length (note 5)	N : No cable, S : 3m, M : 5m, X□□ : Specified length
Ambient operating temp/humidity	Temperature 0 to 40°C, Humidity 20 to 85% RH max. (non-condensing)

Dimensions

CAD drawings can be downloaded from the website

2D CAD

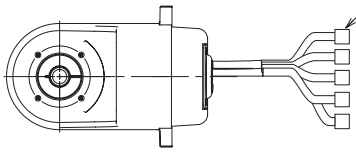

Cable joint connector (*1)

(*1) This connector is used to connect the motor cable, encoder cable and limit switch cable of the vertical axis/rotational axis.

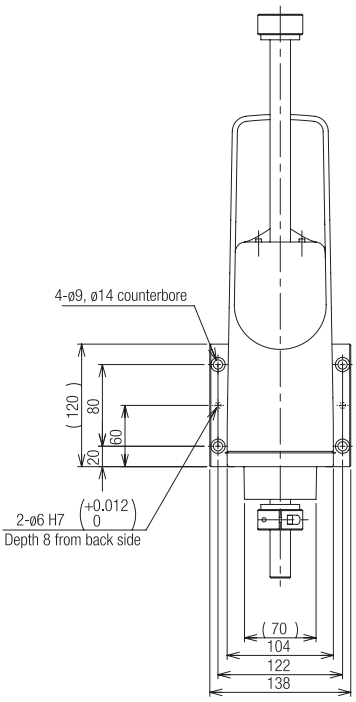

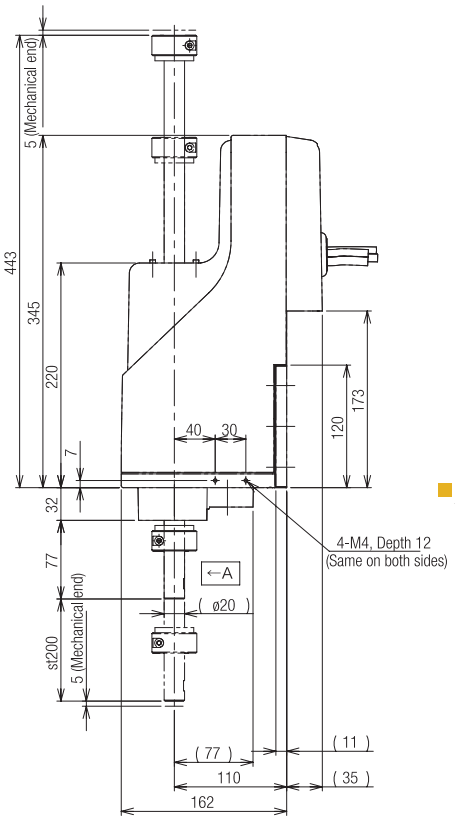

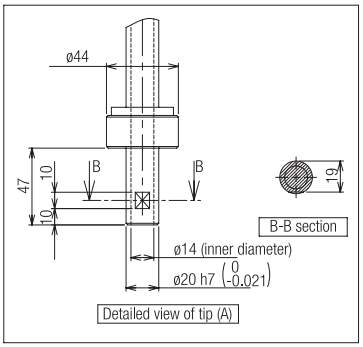

Brake Box (supplied accessory)

This box must be installed along the encoder wiring between the actuator and the controller.
Unit model: RCB-110-RA13-0

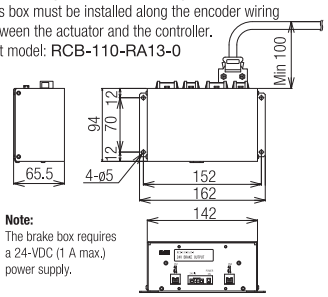

Note:
The brake box requires a 24-VDC (1 A max.) power supply.

Note:
When this unit is combined with a cartesian robot, reduce the speed and acceleration if the actuator is to be moved with the vertical axis lowered.

Applicable Controller Specifications

Applicable Controller	Max number of controlled axes	Connectable encoder type	Operating method	Power-supply voltage
X-SEL-P/Q	6 axes	Absolute/incremental	Program	Single-phase/3-phase 200 VAC

Caution

(Note 1) Based on PTP command operation.
(Note 2) The rated loading capacity assumes operation at an acceleration/deceleration of 0.3G, while the maximum loading capacity assumes operation at an acceleration/deceleration of 0.1G.
(Note 3) The push force of the vertical axis represents the force that pushes an object at the tip of the vertical axis. The value indicated under "Push-motion operation" corresponds to the maximum push force when a push command is executed in the program. The value indicated under "Maximum thrust" corresponds to the maximum thrust achieved during normal positioning operation. If you are performing push-motion operation, be sure to use a push command in the program.
(Note 4) Allowable inertial moment converted to an equivalent value at the center of the rotational axis. The actual value may be lower depending on the conditions of use.
(Note 5) The maximum cable length is 30m. Specify a desired length in meters. (Example X08 = 8m)