INTELLIGENT ACTUATOR

IX

INTELLIGENT ACTUATOR

Horizontal Articulated Robot – IX Series
Tabletop Type, Clean-room Specification
Arm Length 500/600/700/800

IX-NNC50□□/60□□/70□□/80□□

Operation Manual First Edition

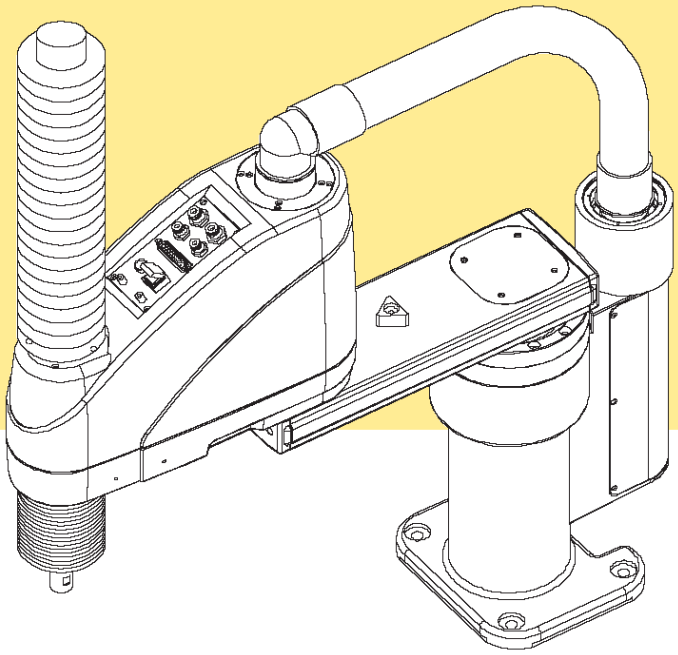

IAI America, Inc.

Introduction

Thank you for purchasing an IAI Horizontal Articulated Robot.

This manual describes the handling, structure, maintenance, and other important aspects of the IX-Series Horizontal Articulated Robot, Clean-room specification (IX-NNC50□□/60□□/70□□/80□□), and provides the user with information necessary to safely operate the robot.

To ensure safe operation, be sure to read this manual and fully understand its contents before using your IX-Series robot. After reading this manual, keep it in a convenient place for reference whenever needed.

Please refer to the separate manual for other arm sizes, dust-proof/splash-proof specifications and ceiling-mount specifications. The standard specifications and items that apply commonly to all specification types are covered in this manual.

Please refer to the separate controller manual for operation programs and other specifications or instructions involving the controller.

Caution

- The unauthorized use or reproduction of all or part of this manual is strictly prohibited.
- The information contained in this manual is subject to change without notice for purposes of product improvement.
- Should you find any error in the descriptions contained in this manual, or if you have any comments or feedback, please contact IAI America, Inc.

Contact us at:

IAI America, Inc.

2690 W. 237th Street, Torrance, CA 90505

Tel: (310) 891-6015
Fax: (310) 891-0815

Safety Symbols

The following symbols are used in this manual to indicate various safety precautions. Please be sure you understand the meaning of each symbol and read all the information accompanying these symbols.

Danger	Failure to observe this instruction is likely to result in serious injury or death.
Warning	Failure to observe this instruction may result in serious injury or death.
Caution	Failure to observe this instruction may result in injury or damage to the equipment.
Note	Failure to observe this instruction will not result in injury, but it should be heeded to ensure proper use of the product.

Safety Precautions

Ensure the safe operation of your robot by complying with all relevant laws, ordinances and rules.

Be certain that all applicable personnel at the site receive proper training.

For any work that must be performed within the robot’s operating range, specify a work procedure and make sure it is communicated to, and fully understood, by each operator.

Precautions for Installation of the Robot

(1) Ensuring a proper service environment
Refer to the section entitled “Installation Environment and Storage Environment” to secure a proper service environment for the robot.

(2) Ensuring a space to cover the robot’s operating range
Refer to the section entitled “Robot Operation Area” to secure a sufficient operation area for the robot.

(3) Ensuring work/maintenance space
Ensure a sufficient range of operation for work and maintenance so that operation, adjustment and inspection can be carried out without a problem.

(4) Location for installation of control unit
Install the control unit, such as a controller, at a location outside the robot’s range of movement, from which robot operation can be observed in its entirety.

(5) Installation of a safety cage
Install a safety cage or enclosure, or stretch ropes or chains, around the perimeter of the robot’s range of movement, so that the operator and bystanders cannot easily enter or bring objects into the robot’s operation area.

(6) Installation of interlocks
Install a switch (sensor) at the entrance to the safety cage, enclosure or other safety barrier and interlock it to the robot, so that the robot will stop operating the moment the door, ropes, chains, etc., are opened. Additionally, make sure that entry into the operating range is not possible other than from the interlocked entrance.

(7) Installation of an emergency-stop switch
Provide an emergency-stop switch at a location that is instantly accessible by the operator in case of an emergency.

(8) Attachment of caution labels
Be sure to attach the supplied caution labels at the entrance to and exit from the operation area or other location, placing such labels where the operator can easily see and recognize them. Also, maintain the legibility of caution labels by making sure they are not removed or smudged.

(9) Prohibition of robot modification
Never attempt to modify the robot or controller.

(10) Protection against flying work
If there is a possibility that the work held by the robot may be released and allowed to fly off, drop or otherwise jeopardize the operator’s safety, implement appropriate protective measures in consideration of the size, weight, temperature, chemical properties and other characteristics of the work.

⚠ Danger

- The safety of the operator and bystanders cannot be assured if the above precautions for installation are not heeded. Failure to observe these precautions may result in a serious accident or damage to the robot.

Precautions for Work Near the Robot

Contact with a moving robot may result in a serious accident. Be sure to observe the following items:

(1) Prohibition against entering the robot's range of movement during operation
Never enter the robot's range of movement while it is operating or in the ready mode.

(2) Before entering the robot's range of movement
If you must enter the robot's range of movement, always press the emergency-stop switch or turn off the power to halt the robot's operation before entering.

(3) Operation inside the safety cage
For teaching, inspection and other operations that require the operator to work in the safety cage or enclosure while the robot is operating, specify a work procedure and make sure it is communicated to, and fully understood by, each operator. Additionally, the following measures should be taken:

- The operator shall carry a hand-held emergency-stop switch at all times so that the robot can be stopped as soon as an abnormal condition arises.
- A person other than the operator shall monitor the work to ensure that operation of the robot can be stopped as soon as an abnormal condition arises.
- A person other than the operator shall monitor the work in order to make sure that no unauthorized person will inadvertently operate the switches or controls.
- A "Work in Progress" sign must be displayed in a conspicuous location.

Danger **Warning**

- Failure to observe the above precautions for work near the robot may result in serious injury or death.
- Do not enter the robot's range of movement while it is operating.
- Always press the emergency-stop switch or turn off the power before entering the robot's range of movement.
- A person other than the operator must be sure to monitor the work whenever the operator enters the robot's range of movement.

Precautions for Operation of the Robot

(1) Power on
Before turning on the power, confirm that no one is working in the immediate vicinity of the robot.

(2) Performing work when the robot is operating
Before entering the robot's range of movement to perform setup or any other task, always press the emergency-stop switch to disable operation of the robot.

(3) Action to take upon detection of abnormality
If noise or vibration is detected when the robot is operating, immediately stop the robot, investigate the cause, and take appropriate action. Continuing to operate the robot without correcting the problem will damage the robot.

(4) Acceleration setting
Operate the robot at an appropriate rate of acceleration in accordance with the load being carried. Failure to set the acceleration properly will shorten the service life of the drive part, cause damage, and generate vibration during positioning. (See "Reference Acceleration/Deceleration Settings.")

(5) Program operation check
Prior to running your program, be sure to confirm its proper operation at safe speeds. If the program contains an error, the robot may move to an unexpected position and damage the work or its own components.

Danger **Warning** **Caution**

- Failure to observe the above precautions for robot operation may result in a serious accident or damage to the robot.
- Always press the emergency-stop switch before entering the robot's range of operation.
- If the robot is found abnormal, stop the robot immediately and investigate the cause. Failure to do so may damage the robot.

Precautions for Teaching and Inspection/Maintenance/Adjustment Operations

(1) Special training for teaching personnel
Be certain that all applicable personnel at the site receive proper training.

(2) Special training for inspection/maintenance/adjustment personnel
Inspection, maintenance and adjustment must be performed by qualified personnel who have been specially trained in the operation of industrial robots.

(3) Participation of inspection/maintenance/adjustment personnel in IAI's seminar on robots
Inspection, maintenance and adjustment must be performed by qualified personnel who have participated in the robot seminar organized by IAI or in the presence of personnel who have participated in the seminar.

(4) Understanding the robot's characteristics and work procedure
Do not perform teaching, inspection, maintenance or adjustment without a full understanding of the robot's characteristics and work procedure. Any attempt to perform work without the required knowledge may result in a serious accident.

(5) Items to note on teaching and inspection/maintenance/adjustment
Observe the following items in addition to the aforementioned precautions:

- Before commencing the work, confirm that all emergency-stop devices are functioning properly.
- Turn off the power to the robot if work can be performed without the robot being operated.
- Do not enter the robot's range of operation unless necessary.
- If any externally connected equipment is used, make sure it is not operating. Alternatively, make an arrangement so that only the operator can control the equipment.
- Before releasing the brake of axis 3 (vertical axis), provide a measure to prevent axis 3 from dropping.
- Before connecting or disconnecting a cable, always turn off the power to the controller. Connecting/disconnecting a cable with the power supplied to the controller may cause the robot to operate abnormally, resulting in a serious accident.

Danger **Warning**

- Failure to observe the above precautions for teaching and inspection/maintenance/adjustment operations may result in a serious accident. Additionally, it may cause the robot to operate abnormally or sustain damage.
- Always confirm that all emergency-stop devices are functioning properly before commencing the work.
- Always press the emergency-stop button before entering the robot's range of movement.
- Releasing the brake of axis 3 (vertical axis) generates the risk of danger, because the axis may drop. Be careful not to get trapped between axis 3 and the platform or other structure.

Warranty Period and Scope of Warranty

Your IX-Series robot has passed the inspections performed by IAI prior to shipment.
However, we offer the following warranty to cover an unforeseen failure.

Warranty Period

The warranty period expires at the following timing, whichever is soonest:

- Elapse of 18 months after shipment from IAI
- Elapse of 12 months after delivery to the location specified by the user
- Elapse of 2,500 hours of operation

Scope of Warranty

Should a manufacturing defect be found during the above warranty period despite proper use of the product, IAI will repair the defect free of charge.
However, the following items are not covered by the warranty:

- Result of aging, such as natural discoloration of paint
- Consumption of consumable parts (battery, timing belt, cable, etc.) due to use
- A minor irregularity, such as noise, whose severity depends on subjective judgment but does not affect product quality or function
- A defect arising from improper use or handling by the user
- A defect arising from inappropriate or erroneous maintenance/inspection
- A defect arising from modification not approved by IAI or its agent
- A defect arising from the use of parts other than genuine IAI parts
- A defect arising from an act of God, such as an earthquake, storm, flood or lightning, accident, fire or other unforeseen event

This warranty only covers the product unit delivered. IAI shall bear no responsibility for any secondary loss caused by a defect in the delivered product.
The user must bring the defective product to our factory in order to have it repaired.
Separate fees will apply if an engineer is sent to the user’s site, even during the warranty period.

Table of Contents

1 Names of Robot Parts 1
- 1.1 Names of Parts 1
- 1.2 Labels 2
- 1.3 Label Positions 3

2 Transportation and Handling 4
- 2.1 Handling of the Carton 4
- 2.2 Packing Condition of the Robot 4
- 2.3 Handling of Individual Components 5
- 2.4 Checking after Unpacking 5
- 2.5 Transporting the Robot 6

3 Installation Environment and Storage Environment 7
- 3.1 Installation Environment 7
- 3.2 Installation Platform 7
- 3.3 Storage Environment 8

4 Installation of the Robot 9
- 4.1 Installing the Robot 9
- 4.2 Connecting the Controller 10
- 4.3 Checking after Installation 12

5 Precautions for Use 13
- 5.1 Reference Acceleration/Deceleration Settings 13
- 5.2 Tools 15
- 5.3 Carrying Load 16
- 5.4 User Wiring and Piping 17
- 5.5 Suction Rate 19

6 Inspection/Maintenance 20
- 6.1 Inspection/Maintenance 20
- 6.2 How to Replace Bellows 22
- 6.3 How to Check/Adjust Belt Tension 28
- 6.4 Battery Replacement 35
- 6.5 Absolute Reset Procedure 38

7 Specifications 54
- 7.1 Specification Table 54
- 7.2 External Dimensions 62
- 7.3 Robot Operation Area 66
- 7.4 Wiring Diagram 68
- 7.5 230V Circuit Components 69

8 Contacting Us 70

1 Names of Robot Parts

1.1 Names of Parts

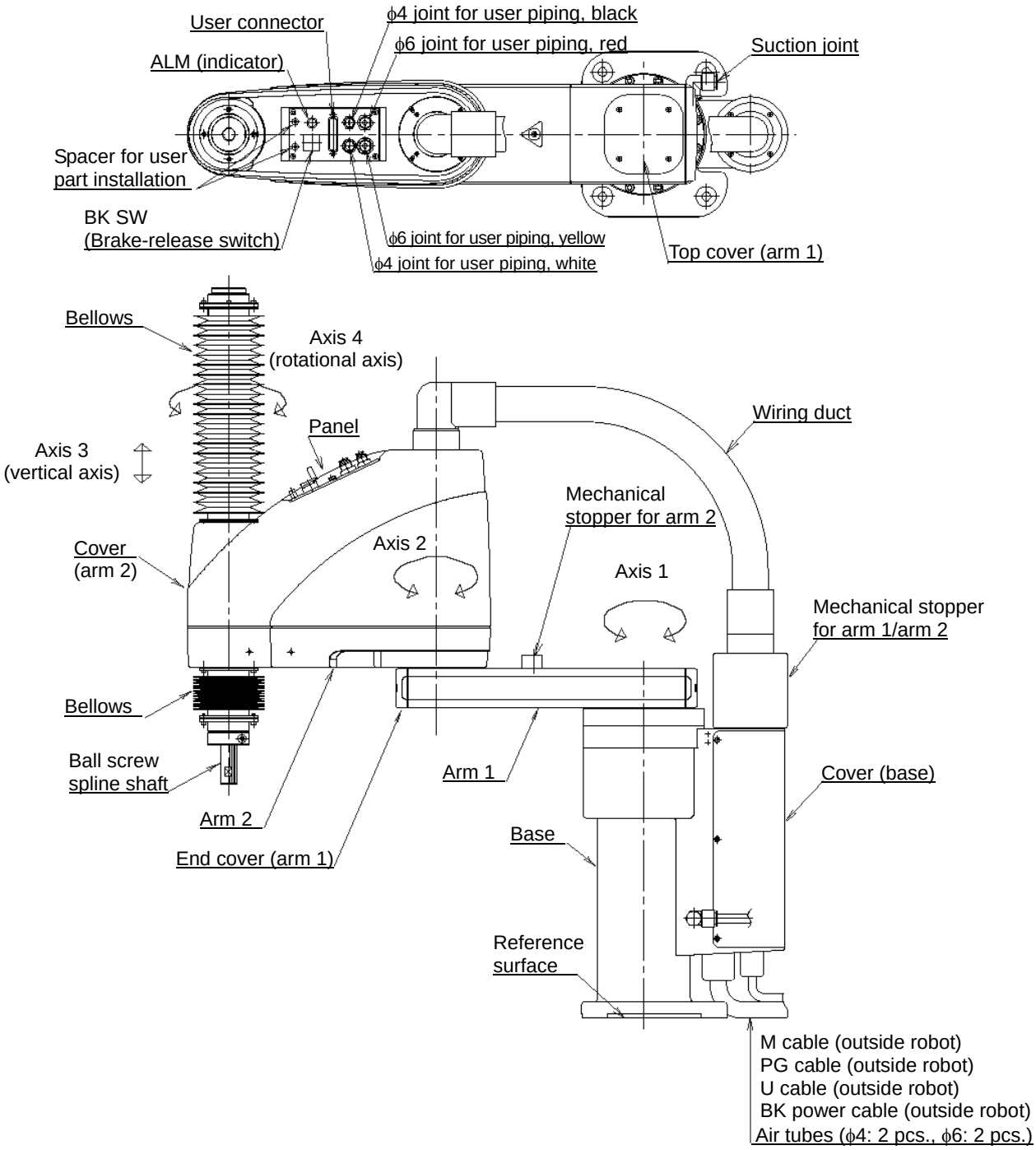

1.2 Labels

The following labels are attached on the robot and controller. Be sure to observe the instructions and cautions written on the labels to ensure the correct use of the robot/controller.

Labels on the Robot

Prohibition of entry into the operation area

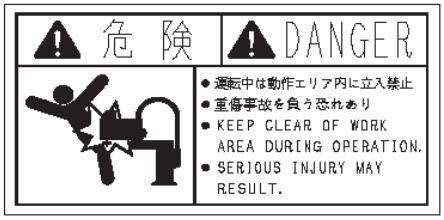

Warning on handling of the vertical axis

Warning against electric shock

Robot serial number

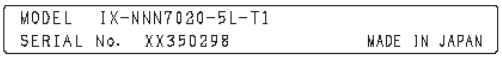

CE-certified robot (Provided only for CE-certified models)

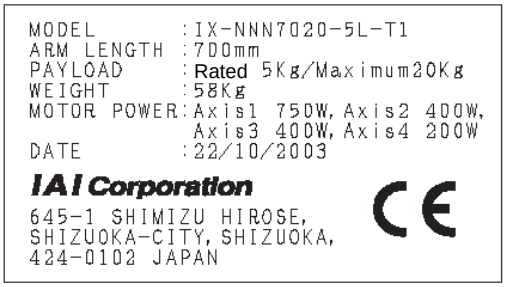

Labels on the Controller

Caution/warning on handling of the controller

Designation of the connected robot

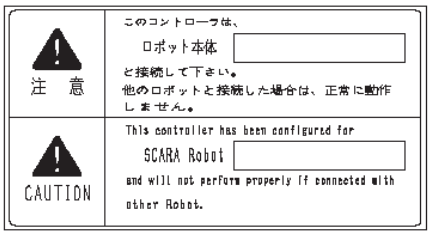

Controller serial number (Other than CE-certified models)

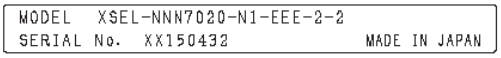

Controller serial number (CE-certified models)

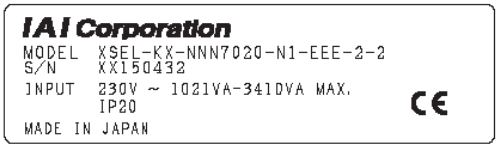

Danger **Warning** **Caution**

- Failure to observe the cautionary information provided on the labels may result in serious injury or damage to the robot.

1.3 Label Positions

Label Positions on the Robot

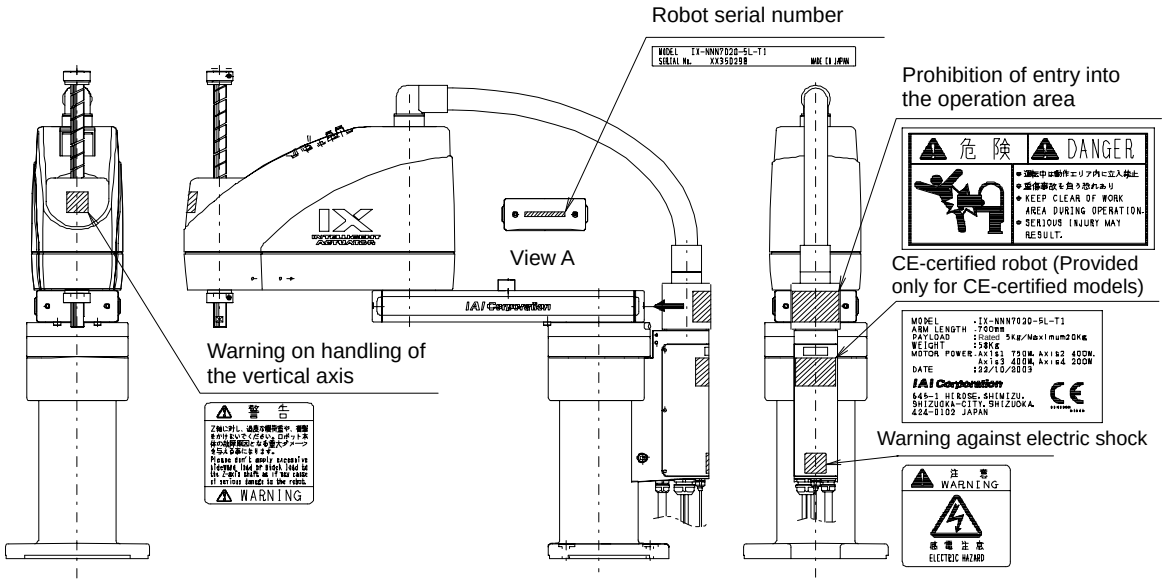

Label Positions on the Controller

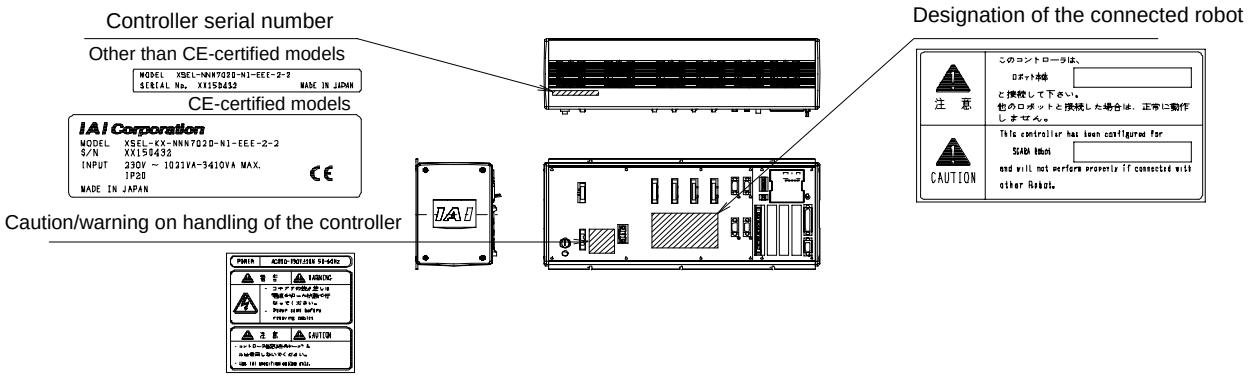

2 Transportation and Handling

2.1 Handling of the Carton

Each robot is packed with a controller prior to shipment.
When transporting the carton containing the robot and controller, observe the following items and be careful not to drop the carton or apply impact due to forcible contact:

- If the carton is heavy, one operator should not attempt to carry it alone.
- Place the carton on a level surface if it is to be left there for a while.
- Do not climb upon the carton.
- Do not place on the carton any heavy object that may cause the carton to deform, or an article whose shape allows a load to be concentrated at one point.

2.2 Packing Condition of the Robot

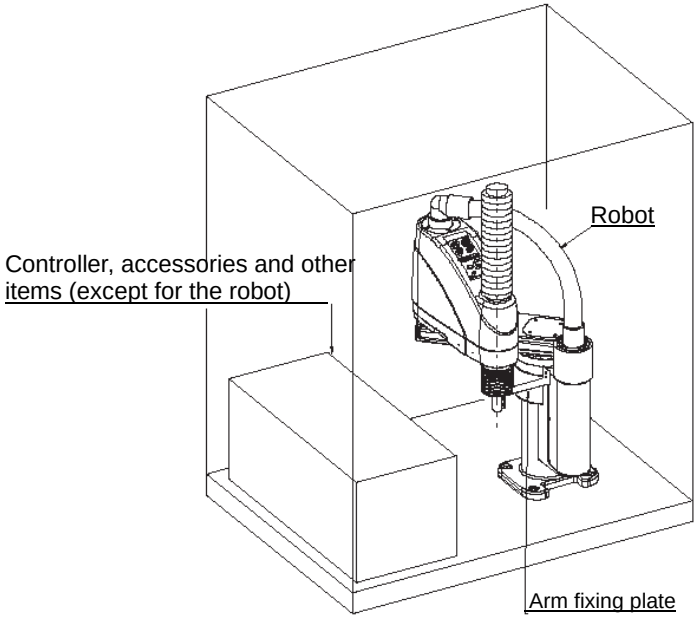

Warning **Caution**

- The robot and controller are very heavy. When transporting the carton containing the robot and controller, handle it with extra care so as not to drop the carton or apply impact due to forcible contact, as it may cause injury or damage to the robot or controller.
- Serious injury may result if the carton is dropped onto a person during transportation.
- Never stand below the carton as it is hoisted.
- Use a carrier device with sufficient loading capacity.
- If a machine or method is used that requires specified skills, it must be operated/performed by a person having the proper qualifications.

2.3 Handling of Individual Components

The robot and controller are supplied as a set.
Your robot cannot be used with the controller supplied with another robot.
When handling multiple robots, be careful not to lose their correct pairings with the controllers.

The robot will not stand on its own after being unloaded from the carton pallet.
Hold it by hand, or place a cushioning material on the floor and place the robot on its side upon the cushion.

2.4 Checking after Unpacking

After unpacking the carton, check the condition of the robot and other items contained in the carton.

Standard parts

Robot	1
Controller	1
Operation manual for robot	1
Operation manual for controller	1

Accessories

Eyebolt	2
D-sub connector	1
Hood set (for D-sub connector)	1
Caution label	2
Positioning label	1
PIO flat cable	1

Optional parts

PC software (type: IA-101-X-MW)

Floppy disk	2
PC connection cable	1
Hand-held emergency-stop switch	1
Operation manual for PC software	1

Absolute reset adjustment jig

Type: JG-1 (IX-NNC50□□, IX-NNC60□□)
JG-3 (IX-NNC70□□, IX-NNC80□□)

Positioning jig for axes 1 and 2	1
Positioning jig for axis 4	1

Caution **Note**

- Always operate the robot using the controller supplied with the robot in the same carton. Using another controller may result in an unexpected operation, damaged motor or other problem.
- After unpacking, be sure to confirm the condition of the robot and other items contained in the carton. Should you find a damaged or missing part, please contact IAI immediately.

2.5 Transporting the Robot

When transporting the robot, affix the arms using the supplied arm fixing plate. Additionally, wrap the cables around the base and secure them with gummed tape or other means.

Use a dolly, forklift, crane or other appropriate equipment for transportation. When transporting the robot, move it slowly so that it maintains its balance. Also, safeguard the robot against vibration or impact.

When a crane is used, install the supplied eyebolts on the robot for the pass-through of ropes. Install the eyebolts following removal of the top cover.

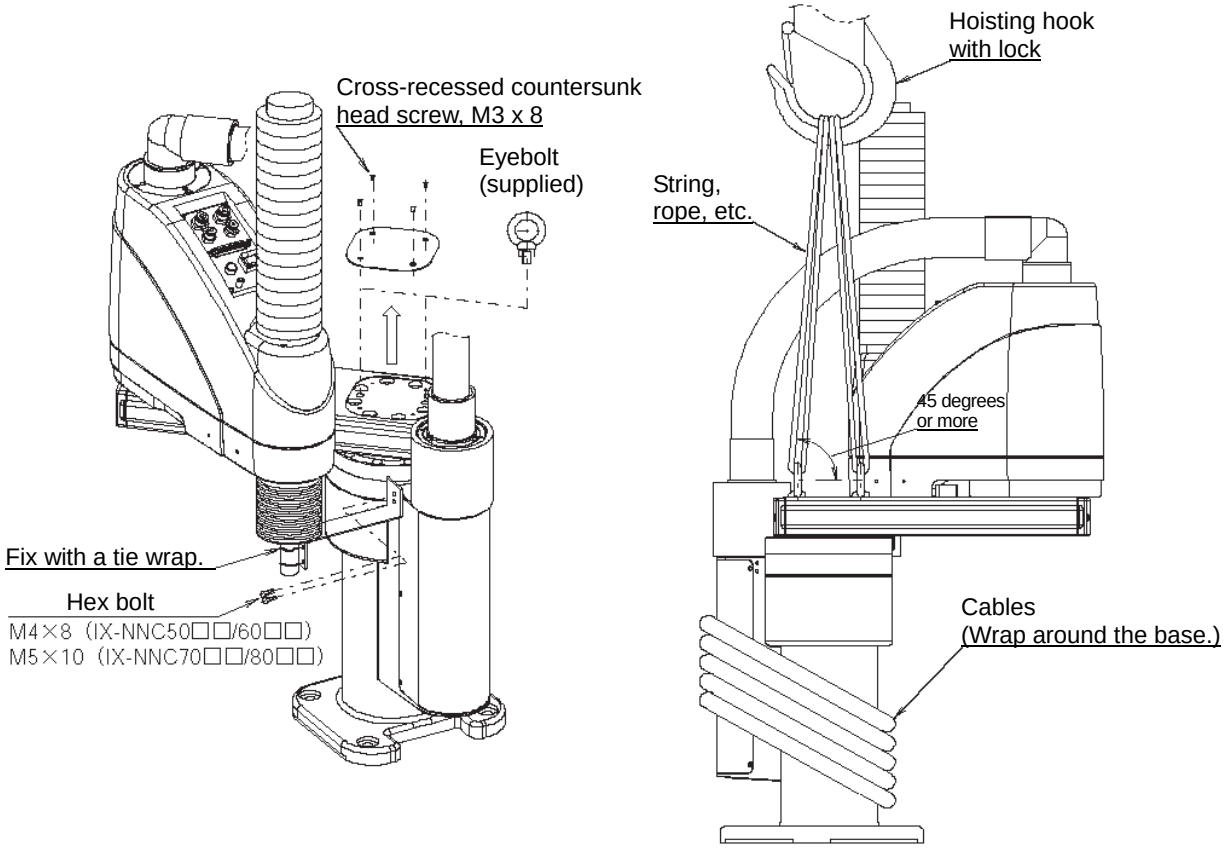

Danger **Warning**

- If the arms and cables remain free, the arms may turn unexpectedly and pinch a hand, or a person may be tripped by the trailing cables.
- Do not attempt to carry the robot by hand, as it may injure the back. Additionally, an injury may result if the robot is dropped onto the feet.
- Serious injury may result if a person is caught under a fallen robot during transportation.
- Never stand below the robot as it is hoisted.
- Use a hoist and ropes that can comfortably support the weight of the robot.
- If a machine or method is used that requires specified skills, it must be operated/performed by a person having the proper qualifications.

3 Installation Environment and Storage Environment

3.1 Installation Environment

Install the robot in an environment that satisfies the following conditions:

- Away from direct sunlight
- Not subject to radiated heat from a high-capacity energy source such as a heat-treating furnace
- Ambient temperature: 0°C to 40°C
- Humidity: 85% or less (non-condensing)
- Not exposed to corrosive or flammable gases
- Not subject to impact or vibration
- Not exposed to a significant amount of electromagnetic waves, ultraviolet rays or radiation
- Sufficient space is available to ensure safety in teaching and maintenance/inspection operations

Generally, the robot must be installed where the operator need not wear protective gear in order to work.

3.2 Installation Platform

The platform on which to install the robot receives a significant reactive force. Be certain the platform has sufficient rigidity to withstand the anticipated force.

- The surface on which the robot is fixed must have a thickness of 25 mm or more.
  The levelness of the robot installation surface must be at least ±0.05 mm.
- Drill and tap holes, as indicated below, into the installation surface of the platform.

Type	Tap size	Remarks
IX-NNC50□□/60□□	M10	Effective thread: 10 mm or longer for steel (20 mm or longer for aluminum)
IX-NNC70□□/80□□	M12	Effective thread: 12 mm or longer for steel (24mm or longer for aluminum)

- The platform must have sufficient rigidity to withstand not only the weight of the robot but also the dynamic moment of inertia that is generated when the robot is operated at maximum speed.
- Secure the platform to the floor or other rigid structure in a manner that prevents any movement due to operation of the robot.
- The installation platform must allow the robot to be mounted on a level surface.

3.3 Storage Environment

The storage environment conforms to the installation environment. If the robot is to be stored for a prolonged period of time, be sure the robot will not be exposed to dew condensation.
Unless otherwise specified, desiccant is not placed in the carton when shipped. If the robot is to be kept in an environment subject to condensation, provide preventive measures from over the carton or directly to the robot after unpacking.
The maximum storage temperature is 60°C for a short storage period. If the robot is to be stored for more than a month, the ambient temperature should not exceed 50°C.

Danger **Warning**

- Failure to provide a proper environment for installation and storage may shorten the service life of the robot, reduce its operation accuracy, or cause a malfunction or failure.
- Never use the robot in a flammable atmosphere. The robot may explode or ignite.

4 Installation of the Robot

4.1 Installing the Robot

Install the robot on a level surface.

Secure the robot using hex bolts and washers.

Type	Bolt size	Tightening torque
IX-NNC50□□/60□□	M10	60 N·m
IX-NNC70□□/80□□	M12	104 N·m

For the hex bolts, use high-tension bolts with an ISO rating of 10.9 or higher.

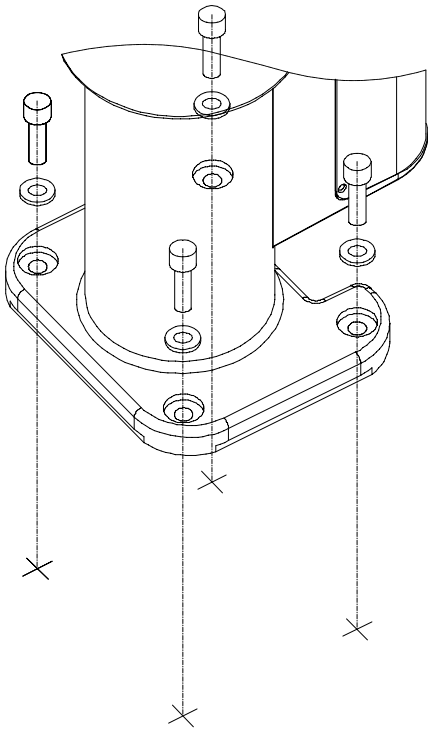

Warning **Caution**

- Always insert a washer below each bolt. Without a washer, the bolt-bearing surface may sink.
- Tighten the hex bolts securely to the correct torque. Improperly tightened bolts may reduce the accuracy of robot operation, and in the worst case cause the robot to overturn.

4.2 Connecting the Controller

The controller connection cables are attached on the robot (standard cable: 5 m, to air-tube joint: 150 mm).

Pay attention to the following items when connecting the controller:

- Connect to the robot of the serial number specified on the robot designation label provided on the front panel of the controller.

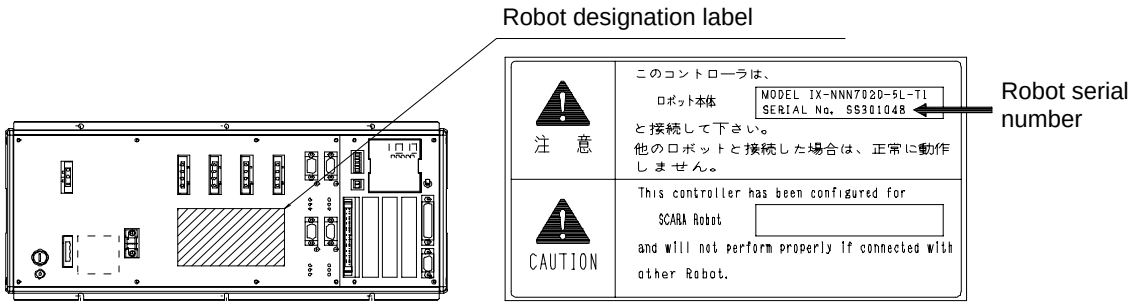

- Connect the cables securely after confirming that they are free from damage or bent connector pins.
- Connect each cable by aligning the indication on the marking tube on the cable with the indication on the controller panel.
- When installing the PG connector (D-sub connector), ensure correct orientation of the connector.
- The brake power circuit is provided on the primary side (high-voltage side). Therefore, provide a dedicated 24 VDC power supply for the brake. The brake must not share the I/O power supply or the power supply for the secondary circuit.
  The brake power supply requires an output voltage of 24 VDC ± 10% and a current capacity of 20 to 30 watts.

Refer to the operation manuals for the controller and PC software for the procedures to connect the I/O cable, controller power cable, PC connection cable, etc.

⚠ Warning

- Be sure to connect to the robot of the serial number specified on the front panel of the controller. The controller will not operate properly if any other robot is connected. Failure to observe this warning may cause the robot to malfunction, resulting in a serious accident.
- Before connecting or disconnecting a cable, always turn off the power to the controller. Connecting/disconnecting a cable with the power supplied to the controller may cause the robot to malfunction, resulting in a serious accident.
- Installing the connectors into the wrong sockets may cause the robot to malfunction. Be sure to check the designation on the cable with that on the controller panel before plugging in any connector.
- If the connectors are not inserted securely, the robot may malfunction and generate the risk of danger. Be sure to affix each connector with the supplied screws.

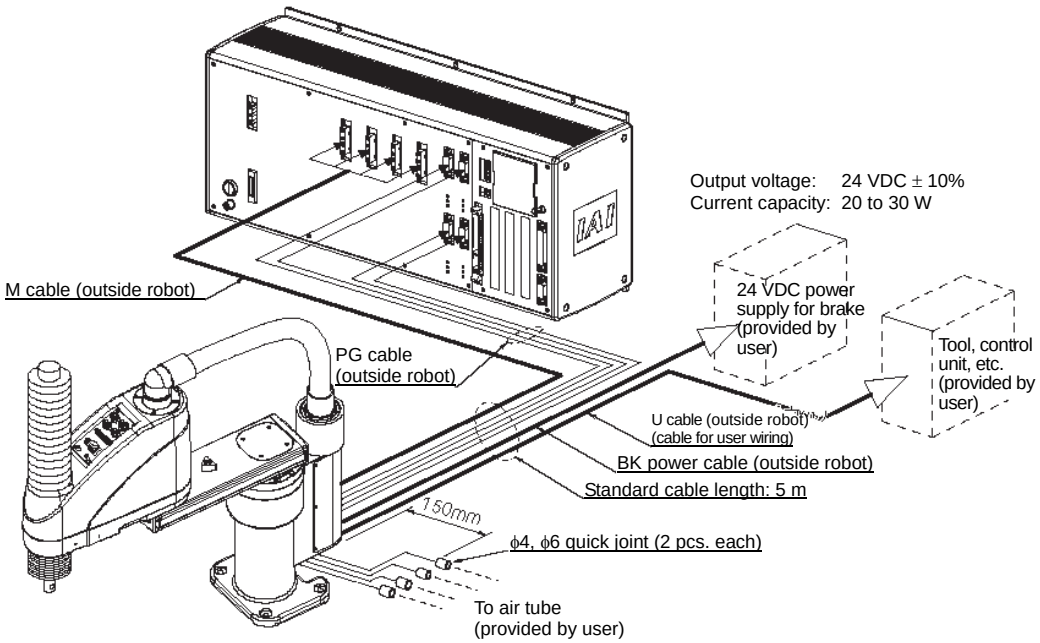

⚠ Warning

- Before connecting or disconnecting a cable, always turn off the power to the controller. Connecting/disconnecting a cable with the power supplied to the controller may cause the robot to malfunction, resulting in a serious accident.
- Installing the connectors into the wrong sockets may cause the robot to malfunction. Be sure to check the designation on the cable with that on the controller panel before plugging in any connector.
- If the connectors are not inserted securely, the robot may malfunction and generate the risk of danger. Be sure to affix each connector with the supplied screws.

4.3 Checking after Installation

Once the robot has been installed, check the following items:

- Visually check the robot, controller and cables for dents and other abnormalities.
- Confirm that the cables are connected properly and that the connectors are inserted securely.

Warning

- Failure to perform these checks may result in a malfunctioning robot or a damaged controller or robot.

5 Precautions for Use

5.1 Reference Acceleration/Deceleration Settings

Use the robot based on appropriate acceleration/deceleration settings by referring to the following graph:

(1) PTP operation (Set using the SEL language commands ACCS and DCLS.)

IX-NNC50□□/60□□
Reference acceleration/deceleration settings for PTP operation

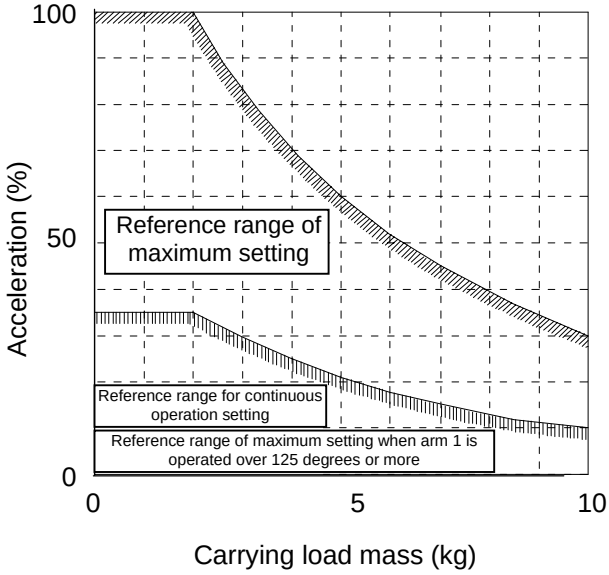

IX-NNC70□□/80□□
Reference acceleration/deceleration settings for PTP operation

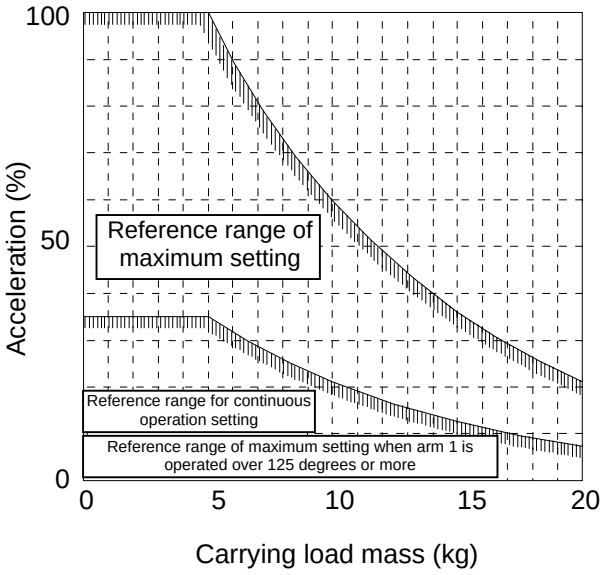

Caution

- To operate the robot at the maximum acceleration, provide a stopping period of three seconds or more after each acceleration/deceleration.
- <u>When arm 1 is operated over 125 degrees or more, use the reference range for the continuous operation setting as the reference range of the maximum setting. The continuous operation setting value should be one-third the appropriate maximum value thus set.</u>
- Start from the appropriate reference range for the continuous operation setting, and then gradually raise the value for the purpose of adjustment.
- If an overload error occurs, lower the acceleration setting as appropriate or provide an appropriate stopping time following each acceleration/deceleration.
- Depending on the position of the vertical axis, the robot may generate vibration when axis 1, axis 2 or the rotational axis turns. If vibration occurs, lower the acceleration as appropriate.
- To move the robot horizontally at high speed, keep the vertical axis as close as possible to the top position. If the vertical axis is operated at the bottom position, the ball screw spline shaft will bend and the vertical axis will be disabled.
- Be careful that the moment of inertia of axis 4 does not exceed the permissible value. (Refer to 5.3, “Carrying Load.”)
- The carrying load indicates a load above the rotational center of axis 4.
- Operate the robot by using an appropriate acceleration coefficient as determined by the mass of the tip. Failure to do so may cause the drive part to wear prematurely or may result in damage or vibration.

(2) CP operation (Set using the SEL language commands ACC and DCL.)

IX-NNC50□□/60□□
Reference acceleration/deceleration settings for CP operation

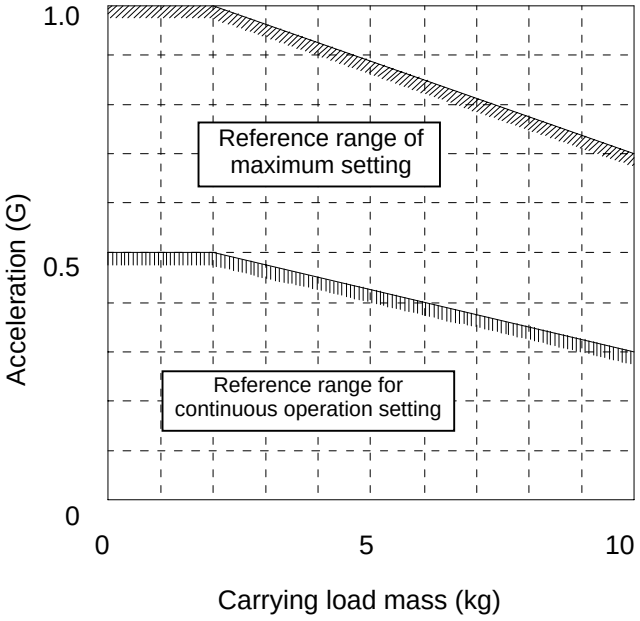

IX-NNC70□□/80□□
Reference acceleration/deceleration settings for CP operation

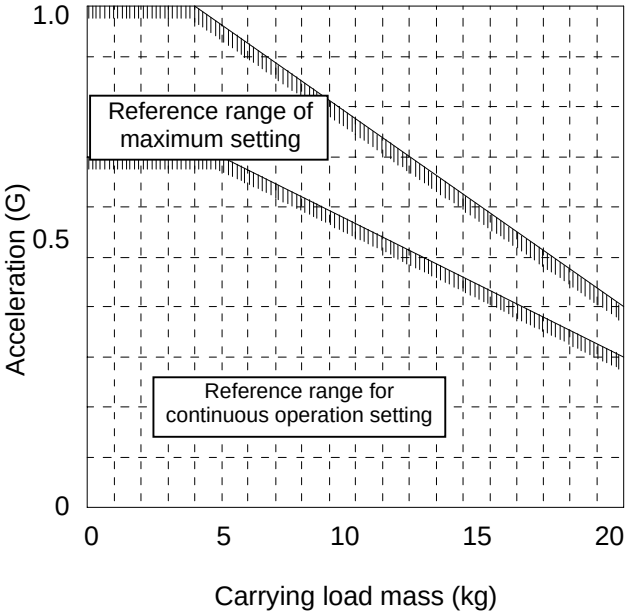

Caution

- To operate the robot at the maximum acceleration, provide a stopping period of three seconds or more after each acceleration/deceleration.
- Start from the appropriate reference range for the continuous operation setting, and then gradually raise the value for the purpose of adjustment.
- If an overload error occurs, lower the acceleration setting as appropriate or provide an appropriate stopping time following each acceleration/deceleration.
- Depending on the position of the vertical axis, the robot may generate vibration when axis 1, axis 2 or the rotational axis turns. If vibration occurs, lower the acceleration as appropriate.
- To move the robot horizontally at high speed, keep the vertical axis as close as possible to the top position. If the vertical axis is operated at the bottom position, the ball screw spline shaft will bend and the vertical axis will be disabled.
- Be careful that the moment of inertia of axis 4 does not exceed the permissible value. (Refer to 5.3, “Carrying Load.”)
- The carrying load indicates a load above the rotational center of axis 4.
- Operate the robot by using an appropriate acceleration coefficient as determined by the mass of the tip. Failure to do so may cause the drive part to wear prematurely or may result in damage or vibration.

5.2 Tools

The tool mounting part must have sufficient strength and rigidity, along with adequate fastening power to prevent positional shift.

It is recommended that a tool be installed over a split ring, span ring or other appropriate part. A sample configuration of tool installation is given below.

The diameter of each tool must not exceed 100 mm. A tool larger than this dimension will interfere with the robot within the robot's range of movement.

Adjust the position (direction) of axis 4 (rotational axis) using the D-cut surface at the tip of axis 4.

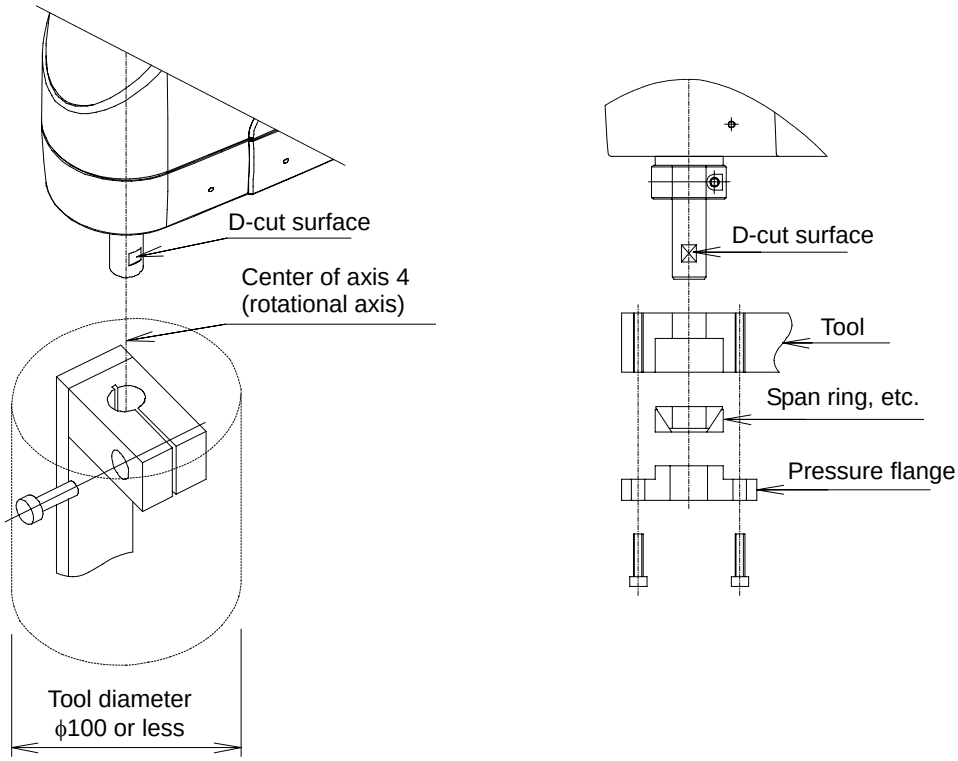

Warning **Caution**

- Turn off the power to the controller and robot before installing a tool.
- If the tool mounting part does not have sufficient strength, it may break while the robot is operating and cause the tool to detach and fly off.
- If the tool diameter exceeds 100 mm, the tool will contact the robot within its range of movement and cause damage to the tool, work and/or robot.
- Avoid attachment of the tool at the D-cut surface via thread fastening. Doing so may damage the D-cut positioning surface.

5.3 Carrying Load

Load capacity

Type	Rated load capacity	Maximum load capacity
IX-NNC50□□/60□□	2 kg	10 kg
IX-NNC70□□/80□□	5 kg	20 kg

Load's permissible moment of inertia

Type	Permissible moment of inertia	Remarks
IX-NNC50□□/60□□	0.06 kg·m^2	Both rated and maximum
IX-NNC70□□/80□□	0.10 kg·m^2	

Load offset (from the center of axis 4 (rotational axis))
50 mm or less

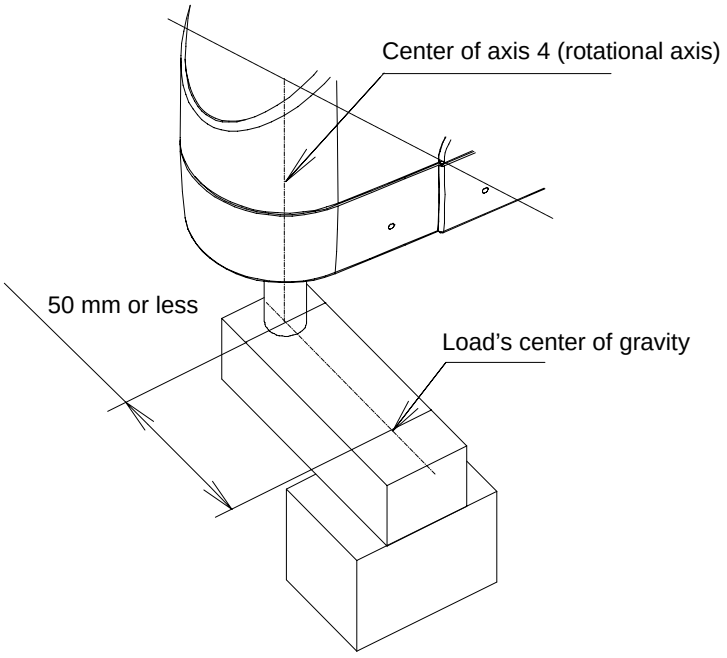

Caution

- Set appropriate acceleration/deceleration according to the mass of the tip and moment of inertia. Failure to do so may cause the drive part to wear prematurely or may result in damage or vibration.
- If vibration occurs, lower the acceleration/deceleration as appropriate.
- If the load gets offset, the robot becomes more likely to cause vibration. Design the tools so that the load's center of gravity aligns with the center of axis 4.
- Do not move the robot horizontally with axis 3 (vertical axis) extended. It may cause the vertical axis to bend and disable the axis. To move the robot horizontally with axis 3 extended, adjust the speed and acceleration/deceleration as appropriate.

5.4 User Wiring and Piping

The robot comes with standard cables and tubes that the user can use in a desired wiring/piping configuration.

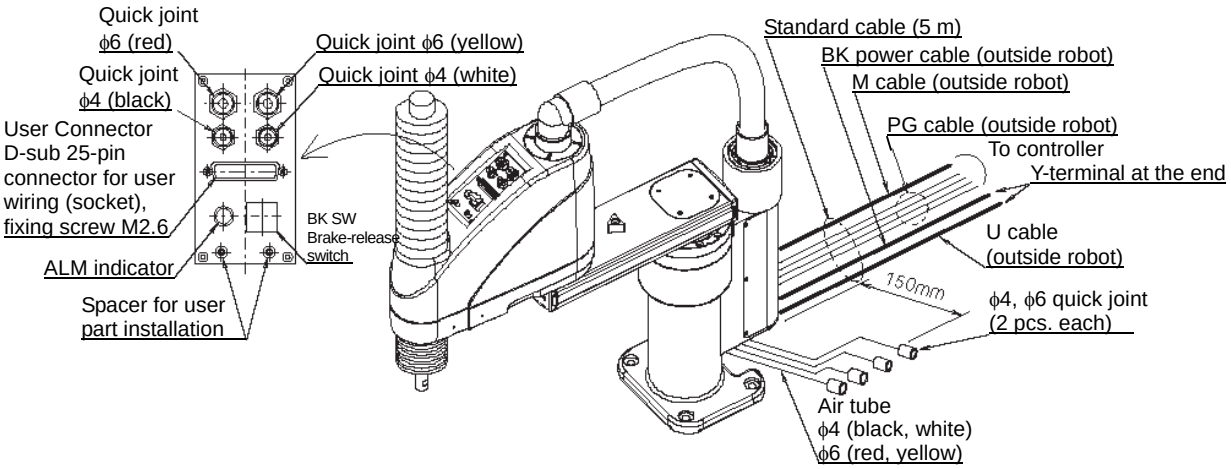

User connector specifications

Rated voltage	3.0 V
Permissible current	1.1 A
Conductor size and number of wires	AWG 26 (0.15 mm^2), 25 wires
Other	Twisted-pair cable (1 to 24), shielded

Piping specifications

Normal service pressure	0.8 MPa
Dimensions (outer diameter x inner diameter) and number of tubes	ϕ4 mm x ϕ2.5 mm, 2 pieces
	ϕ6 mm x ϕ4 mm, 2 pieces
Working medium	Air

ALM (indicator) specifications

Rated voltage	24 VDC
Rated current	12 mA
Illumination color	Red LED

Shape of Y-terminal

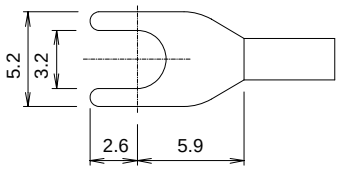

Spacer for user part installation

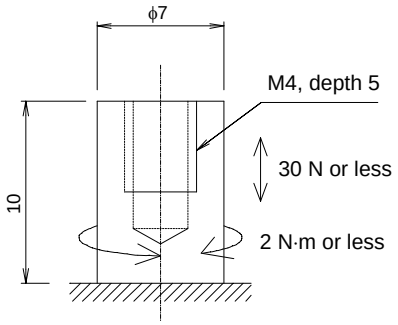

External force applied to the spacers must not exceed 30 N in the axial direction or 2 N·m in the rotating direction (for each spacer).

The robot comes with a D-sub 25-pin mating plug for the user connector.
Solder a user-supplied cable to the D-sub connector (plug), attach the supplied hood, and then connect to the user connector (socket). Use a shielded cable with an outer diameter of ϕ11 or less.

To turn on the indicator, the user must configure a dedicated circuit that uses the controller I/O output signal, etc.

User connector pins and corresponding Y-terminals

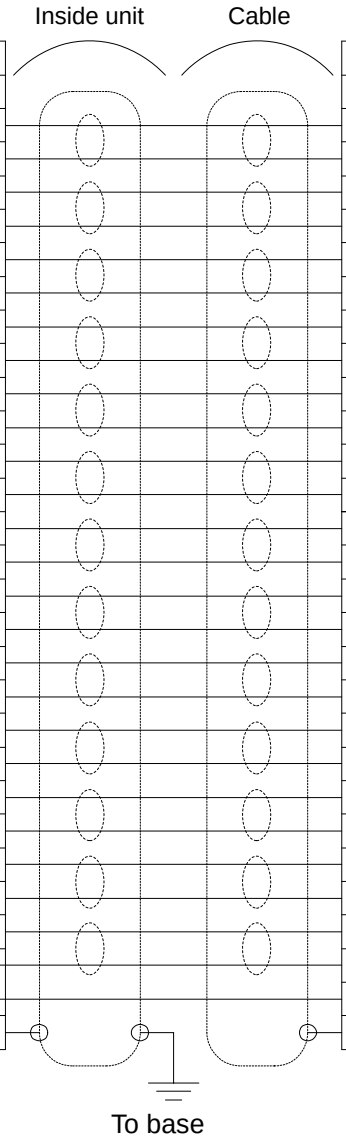

	Arm 2 side		Controller side		
	Connection	No.	Y-terminal designation	Wire color	Connection
User Connector	D-sub, 25-pin	1	U1	Orange 1 red	Y-terminal
		2	U2	Orange 1 black	
		3	U3	Light gray 1 red	
		4	U4	Light gray 1 black	
		5	U5	White 1 red	
		6	U6	White 1 black	
		7	U7	Yellow 1 red	
		8	U8	Yellow 1 black	
		9	U9	Pink 1 red	
		10	U10	Pink 1 black	
		11	U11	Orange 2 red	
		12	U12	Orange 2 black	
		13	U13	Light gray 2 red	
		14	U14	Light gray 2 black	
		15	U15	White 2 red	
		16	U16	White 2 black	
		17	U17	Yellow 2 red	
		18	U18	Yellow 2 black	
		19	U19	Pink 2 red	
		20	U20	Pink 2 black	
		21	U21	Orange 3 red	
		22	U22	Orange 3 black	
		23	U23	Light gray 3 red	
		24	U24	Light gray 3 black	
		25	U25	White 3 red	
ALM	Indicator (LED)		LED +24V	White 3 black	
			LED G24V	Yellow 3 red	
To D-sub connector frame			FG	Green	

Warning

- Before commencing wiring/piping work, turn off the power to the controller and the power/air supplies to the robot. Failure to do so may cause the robot to malfunction.
- Use cables and tubes within their specifications. Failure to do so may result in fire or short circuit due to an overheated cable, or may cause air leaks.
- Connect the shielded cable to the hood. Otherwise, the robot may malfunction due to noise.
- Secure the supplied D-sub connector using the screws on the hood.

5.5 Suction Rate

The robot will conform to cleanliness class 10 when air is sucked at a specified rate from the quick suction joint provided on a side face of the base.

- The user must provide the suction device and suction air tube (ϕ12).

Model	Suction rate (Nl/min)
IX-NNC50□□/60□□	60
IX-NNC70□□/80□□	80

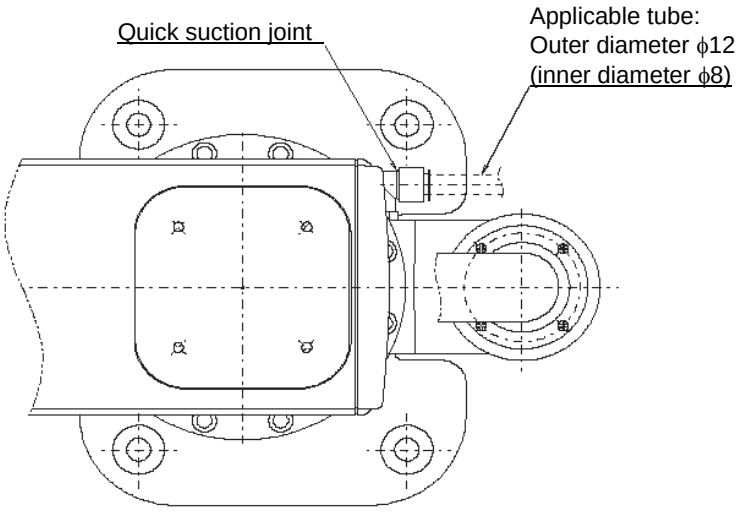

Caution

- The clean room must be designed as a down-flow environment.
- Cleanliness class 10 corresponds to a particle size of 0.1 μm.
- The robot will generate dust if suction is not provided.

6 Inspection/Maintenance

6.1 Inspection/Maintenance

Your horizontal articulated robot must be inspected daily and on a regular basis to ensure safe, efficient operation. Perform the necessary inspections after confirming the maintenance/inspection items required for your IAI robot, as defined in this section.

The following items must be adjusted at our factory. Do not disassemble the following components or cut cables at the user site:

Disassembly of servo motor
Disassembly of ball speed reducer
Disassembly of ball-screw spline
Disassembly of bearing
Disassembly of harmonic speed reducer
Disassembly of brake
Cutting of cable

IAI will not be responsible for any malfunction or damage resulting from the conduct of any operation cited above.

Warning

- Performing inspection or maintenance without fully understanding the details of work may result in a serious accident.
- If inspections are neglected, the drive part may wear prematurely or the robot may malfunction unexpectedly.

6.1.1 Daily Inspection

Check the following items daily before and after operating the robot.
Observe the precautions for work near the robot and for inspection/maintenance/adjustment operations when carrying out each check.

Check location	Description
Safety cage	Correct the deformation or positional shift of the cage. Confirm that the interlock mechanism is operating properly.
Robot	Check the robot mounting bolts for looseness. Check the exterior for abnormality, loose covers, flaws, dents, etc. (If the robot has flaws or other abnormalities, please contact IAI.) Check for abnormal move, vibration or noise.
Cables	Check the cables for flaws. Check the cable mounting parts for looseness.
Emergency-stop switch	Confirm that the emergency-stop switch functions properly.

6.1.2 Six-Month Inspection

Check the following items on the robot every six months.
Observe the precautions for work near the robot and for inspection/maintenance/adjustment operations when carrying out each check.

Check location	Description
Robot	Check the arm mounting sections for looseness. (If any of the arm mounting sections is loose, tighten the fastening parts securely.)
Ball-screw spline	Add grease. (AFE Grease by THK or equivalent)
Timing belts of axes 3 and 4	• Check the belt tension for axes 3 and 4. • Check the belts for flaws, cracks, wear, etc.
Connectors	Check the connectors for looseness.

If the robot has flaws or other abnormalities, please contact IAI.

6.1.3 Yearly Inspection

Check the following items on the robot every year.
Observe the precautions for work near the robot and for inspection/maintenance/adjustment operations when carrying out each check.

Check location	Description
*Harmonic speed reducer	Change the grease. (Contact IAI.)
Ball-screw spline	Check the shaft for looseness. (Contact IAI if an abnormality is found.)

* Based on 24-hour operation. Change the grease every three years or so if the robot is operated eight hours a day.

⚠ Warning

- Performing inspection or maintenance without fully understanding the details of work may result in a serious accident.
- If inspections are neglected, the drive part may wear prematurely or the robot may malfunction unexpectedly.
- Display a “Work in Progress” sign so that other operators will not operate the controller, operation panel, etc.

6.2 How to Replace Bellows

6.2.1 IX-NNC-50□□/60□□

Preparation

The following tools are required when replacing bellows in the IX-NNC-50□□/60□□:

- Hex wrenches (2, 2.5 and 4 mm)
- Replacement bellows (2 units)

Turn off the power to the controller. Do not cut off the 24 VDC power supply to the brake.

Disassembly

(1) Remove the bolts affixing the bellows.
(2) Remove the setscrews affixing the top stopper, as well as collar A and gasket A affixing the bellows-turning unit at the bottom.

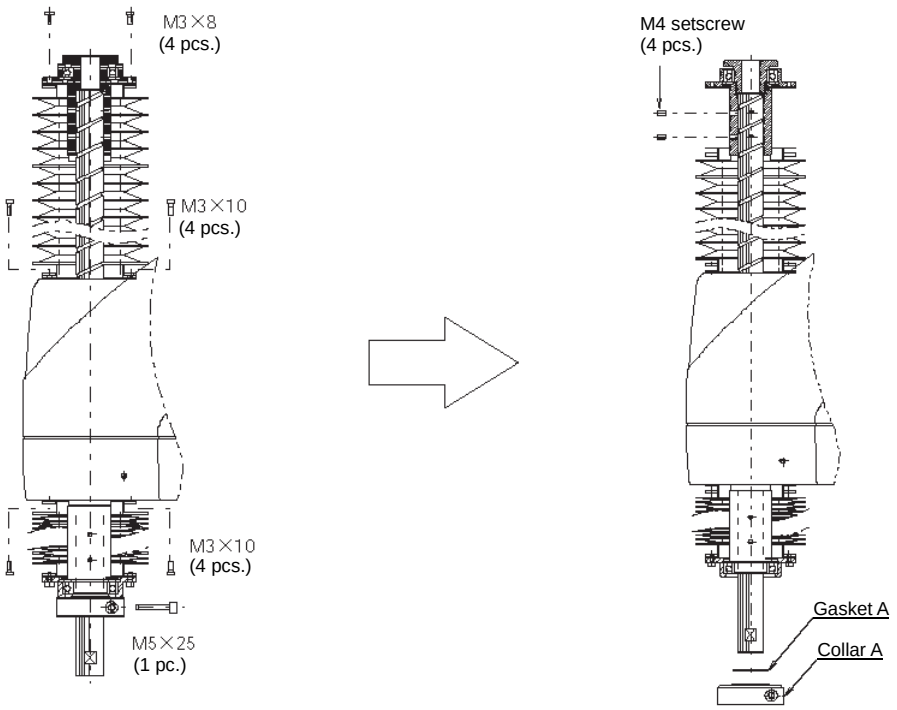

Warning **Caution**

- Performing inspection or maintenance without fully understanding the details of work may result in a serious accident.
- If inspections are neglected, the drive part may wear prematurely or the robot may malfunction unexpectedly.
- Display a “Work in Progress” sign so that other operators will not operate the controller, operation panel, etc.
- When removing the stopper bolts at the top, exercise caution not to let the spline shaft come off from the nuts and drop.
- Disassembly of the bellows generates dust. Before disassembling the bellows, move the robot to a location where dust will not cause problem, or cover the robot with a plastic sheet, etc., to prevent dust from scattering.

(3) Remove the stopper at the top and bellows-turning unit at the bottom.
(4) Remove the bellows from the robot and separate affixing plates A and B from the bellows.

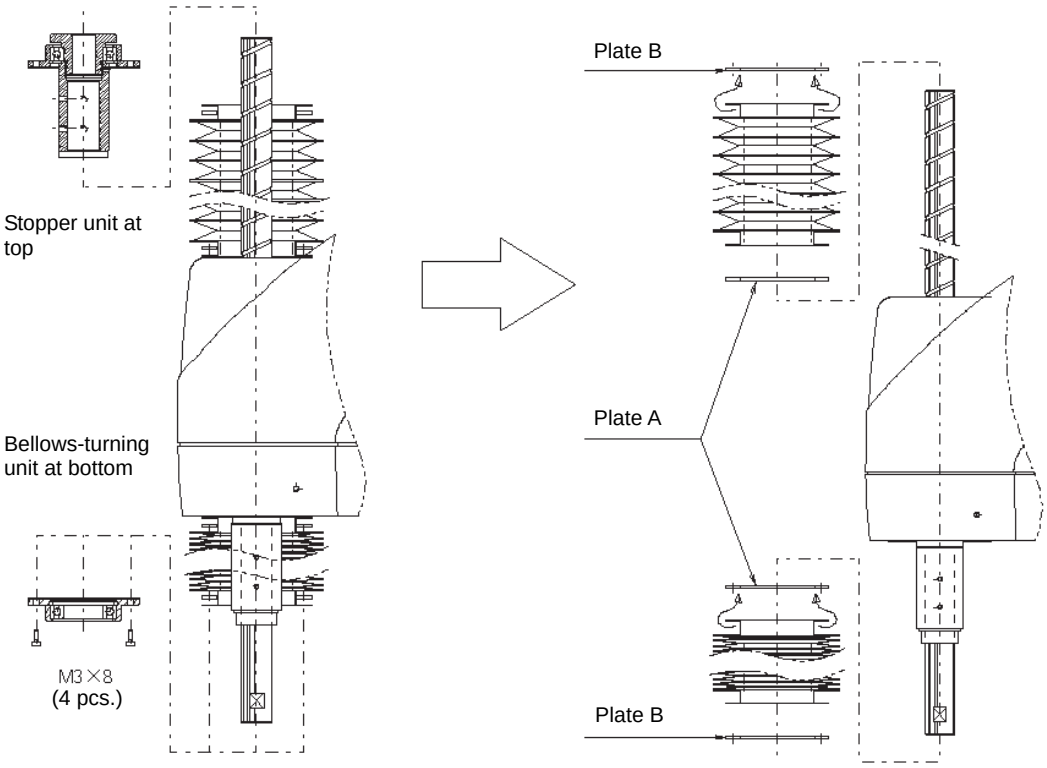

Warning **Caution**

- Performing inspection or maintenance without fully understanding the details of work may result in a serious accident.
- If inspections are neglected, the drive part may wear prematurely or the robot may malfunction unexpectedly.
- Display a “Work in Progress” sign so that other operators will not operate the controller, operation panel, etc.
- When removing the stopper bolts at the top, exercise caution not to let the spline shaft come off from the nuts and drop.
- Disassembly of the bellows generates dust. Before disassembling the bellows, move the robot to a location where dust will not cause problem, or cover the robot with a plastic sheet, etc., to prevent dust from scattering.

Assembly

(1) Assemble the bellows by following the disassembly procedure in reverse.
(2) Install the bellows by aligning the positioning mark labels attached on the turning unit and collar A. Move the robot's X-axis, Y-axis, vertical axis and rotational axis to 0, arm length, 0 and 0, respectively, and install and affix the bellows in this position by aligning the arrow position on collar A with the mark on the turning unit. If the marks do not align, reattach the labels.

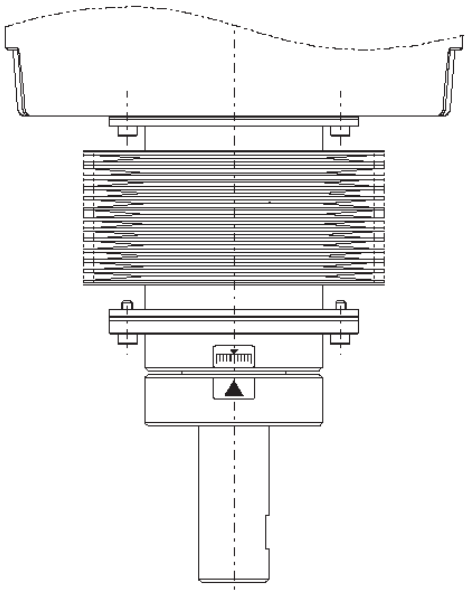

This completes the replacement of bellows.

Warning **Caution**

- Performing inspection or maintenance without fully understanding the details of work may result in a serious accident.
- If inspections are neglected, the drive part may wear prematurely or the robot may malfunction unexpectedly.
- Display a "Work in Progress" sign so that other operators will not operate the controller, operation panel, etc.
- When removing the stopper bolts at the top, exercise caution not to let the spline shaft come off from the nuts and drop.

6.2.2 IX-NNC-70□□/80□□

Preparation

The following tools are required when replacing bellows in the IX-NNC-70□□/80□□:

- Hex wrenches (1.5 and 2 mm)
- Phillips screwdriver
- Replacement bellows (2 units)

Turn off the power to the controller. Do not cut off the 24 VDC power supply to the brake.

Disassembly

(1) Remove the bolts affixing the bellows.
(2) Remove the top and bottom bellows units.

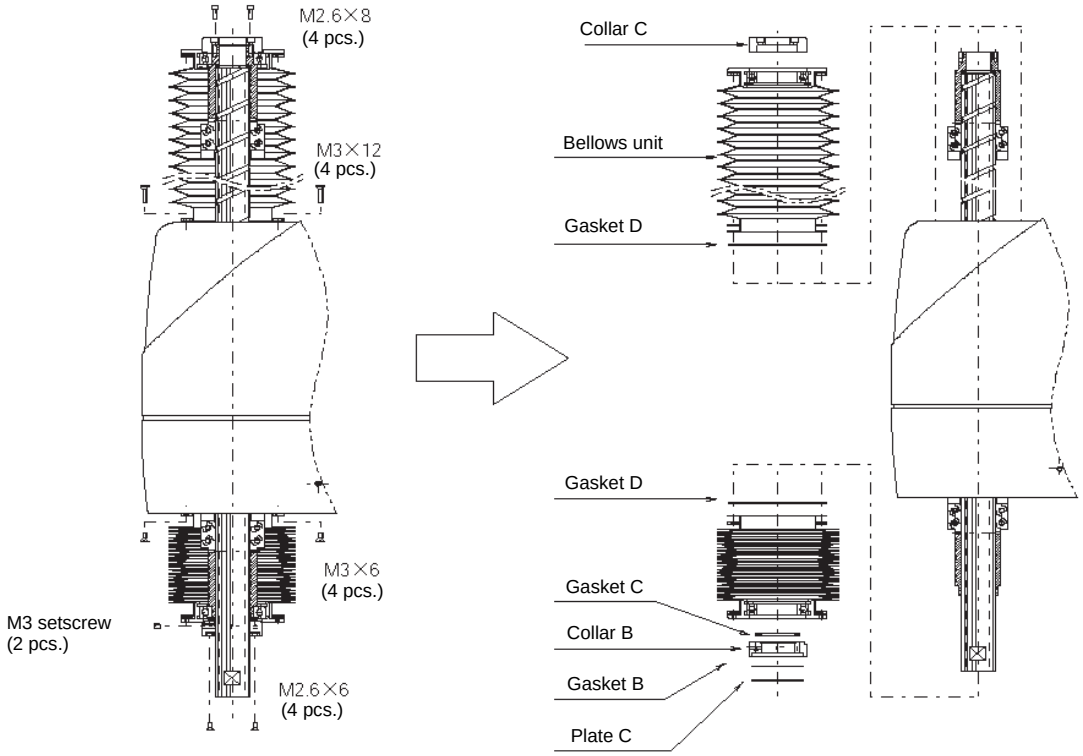

Warning **Caution**

- Performing inspection or maintenance without fully understanding the details of work may result in a serious accident.
- If inspections are neglected, the drive part may wear prematurely or the robot may malfunction unexpectedly.
- Display a “Work in Progress” sign so that other operators will not operate the controller, operation panel, etc.
- Disassembly of the bellows generates dust. Before disassembling the bellows, move the robot to a location where dust will not cause problem, or cover the robot with a plastic sheet, etc., to prevent dust from scattering.

(3) Remove the bellows-turning unit (one unit each at the top and bottom).
(4) Remove affixing plate D from the bellows.

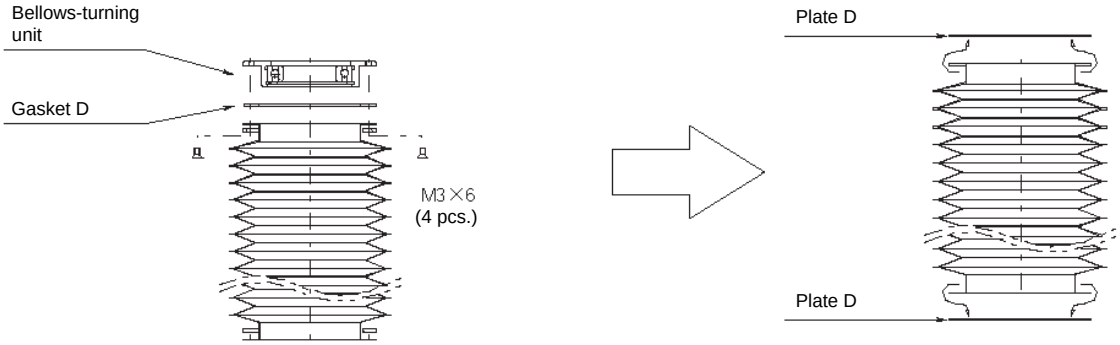

Warning **Caution**

- Performing inspection or maintenance without fully understanding the details of work may result in a serious accident.
- If inspections are neglected, the drive part may wear prematurely or the robot may malfunction unexpectedly.
- Display a “Work in Progress” sign so that other operators will not operate the controller, operation panel, etc.
- Disassembly of the bellows generates dust. Before disassembling the bellows, move the robot to a location where dust will not cause problem, or cover the robot with a plastic sheet, etc., to prevent dust from scattering.

Assembly

(1) Assemble the bellows by following the disassembly procedure in reverse.
(2) Install the bellows by aligning the positioning mark labels attached on the turning unit and collar A. Move the robot's X-axis, Y-axis, vertical axis and rotational axis to 0, arm length, 0 and 0, respectively, and install and affix the bellows in this position by aligning the arrow position on collar A with the mark on the turning unit. If the marks do not align, reattach the labels.

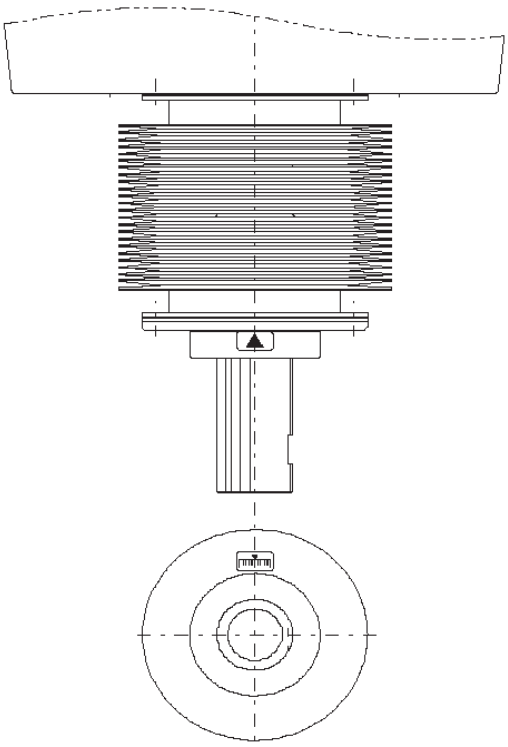

This completes the replacement of bellows.

Warning **Caution**

- Performing inspection or maintenance without fully understanding the details of work may result in a serious accident.
- If inspections are neglected, the drive part may wear prematurely or the robot may malfunction unexpectedly.
- Display a "Work in Progress" sign so that other operators will not operate the controller, operation panel, etc.

6.3 How to Check/Adjust Belt Tension

6.3.1 Preparation

The following tools are required when checking/adjusting belt tension:

- Push-pull gauge (maximum measurement capability of 2 kg)
- Hex wrenches (2.5, 3 and 4 mm)
- Spanners (5.5 and 8 mm)
- Phillips screwdriver
- Scale
- Pin (ϕ3, 40 to 80 mm in length)

Turn off the power to the controller. Do not cut off the 24 VDC power supply to the brake.

Warning **Caution**

- Performing inspection or maintenance without fully understanding the details of work may result in a serious accident.
- If inspections are neglected, the drive part may wear prematurely or the robot may malfunction unexpectedly.
- Display a “Work in Progress” sign so that other operators will not operate the controller, operation panel, etc.

6.3.2 Removing the Cover

(1) With arms 1 and 2 extended as illustrated below, press the brake-release switch [1] to release the brake and then push down the vertical axis until the stopper contacts the pulley.
(2) Remove the countersunk head screws [2], [3] and [4] (four pieces each), in that order.
(3) Remove all connectors (UA, UB, BK and LED) and air tubes (four pieces) from the back of the panel.
(4) Move the cover to the position shown in the photograph.

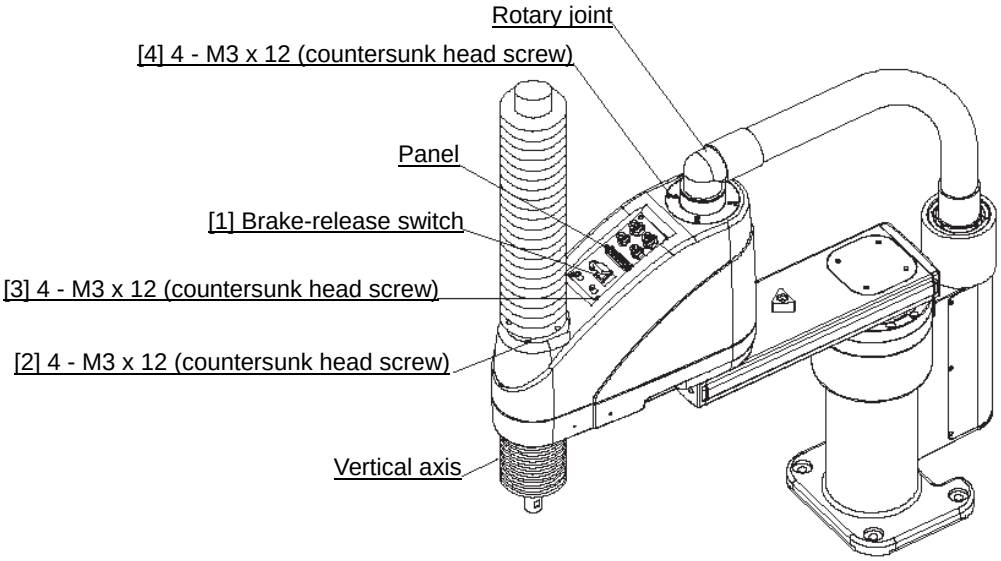

Caution

- Remove the four outer screws for the countersunk head screws [4].
- Do not remove the M/PG connectors at the rotary joint, since it will necessitate an absolute reset.
- The cover will not detach completely, since the M/PG connectors are still connected. Do not pull the cover forcibly.
- Disassembly of the cover generates dust. Before disassembling the cover, move the robot to a location where dust will not cause problem, or cover the robot with a plastic sheet, etc., to prevent dust from scattering.

6.3.3 Checking the Belt Tension

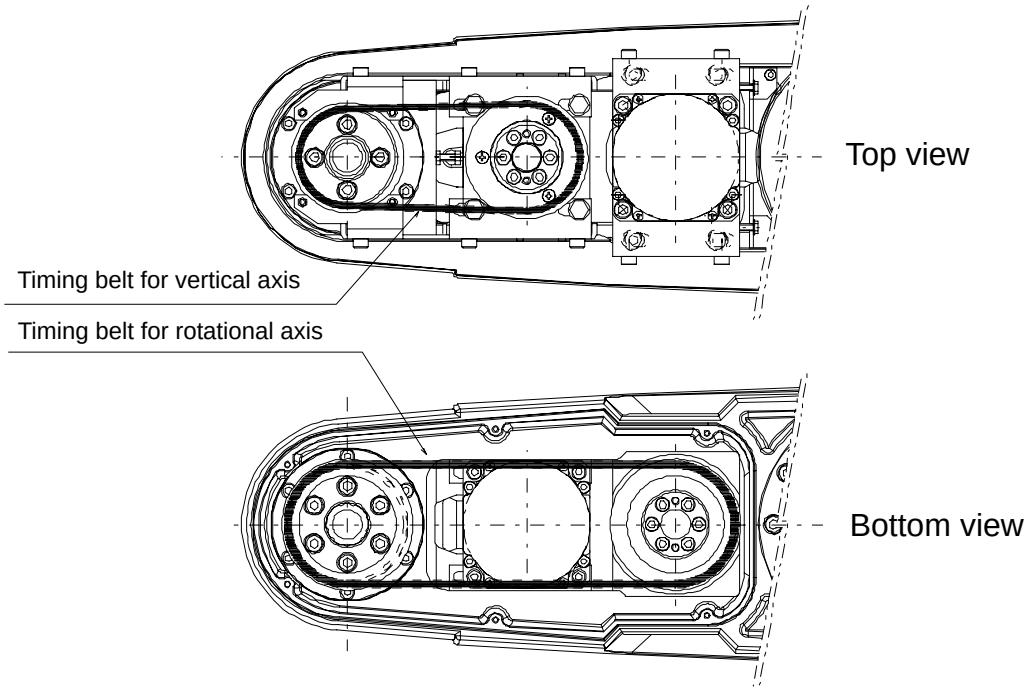

6.3.4 Checking the Belt Tension for the Vertical Axis

Using a push-pull gauge, push the timing belt for vertical axis with a force of A (gf) and measure the amount of deflection.
If the deflection is B (mm), the belt tension is normal.
If not, adjust the belt tension by referring to 6.3.6, “Adjusting the Belt Tension for the Vertical Axis.”

Type	A	B
IX-NNC50□□/60□□	340 ~ 410 (gf)	1.35 (mm)
IX-NNC70□□/80□□	550 ~ 650 (gf)	2.2 (mm)

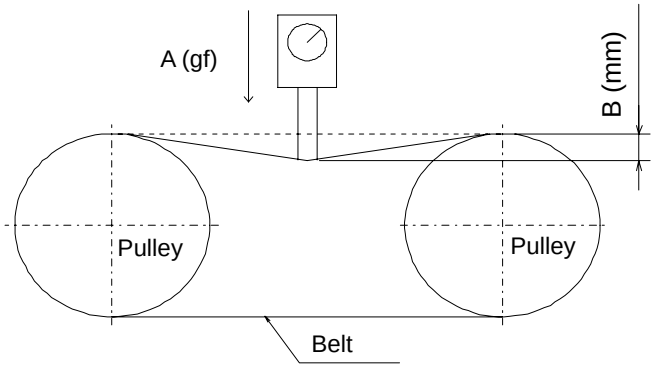

Caution

- When measuring deflection, do not use a gauge with a sharp tip that may damage the belt.
- Disassembly of the cover generates dust. Before disassembling the cover, move the robot to a location where dust will not cause problem, or cover the robot with a plastic sheet, etc., to prevent dust from scattering.

6.3.5 Checking the Belt Tension for the Rotational Axis

(1) Remove one setscrew provided on a side face of arm 2.

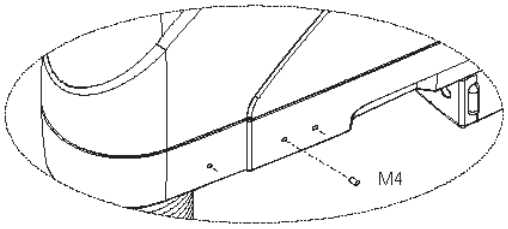

Remove the screw at the center.

(2) Insert a ϕ3 pin in the hole on the side face of arm 2 (pin length: 40 to 80 mm) until the pin lightly contacts the belt, and then mark a point off C (mm) from the surface of arm 2.

(3) Using a push-pull gauge, push the pin with a force of D (kgf). The belt tension is normal if the mark on the pin aligns with the surface of arm 2. If not, adjust the belt tension by referring to 6.3.7, “Adjusting the Belt Tension for the Rotational Axis.”

Type	C	D
IX-NNC50□□/60□□	2.48 (mm)	1.3 ~ 1.5 (kgf)
IX-NNC70□□/80□□	3.60 (mm)	1.6 ~ 2.0 (kgf)

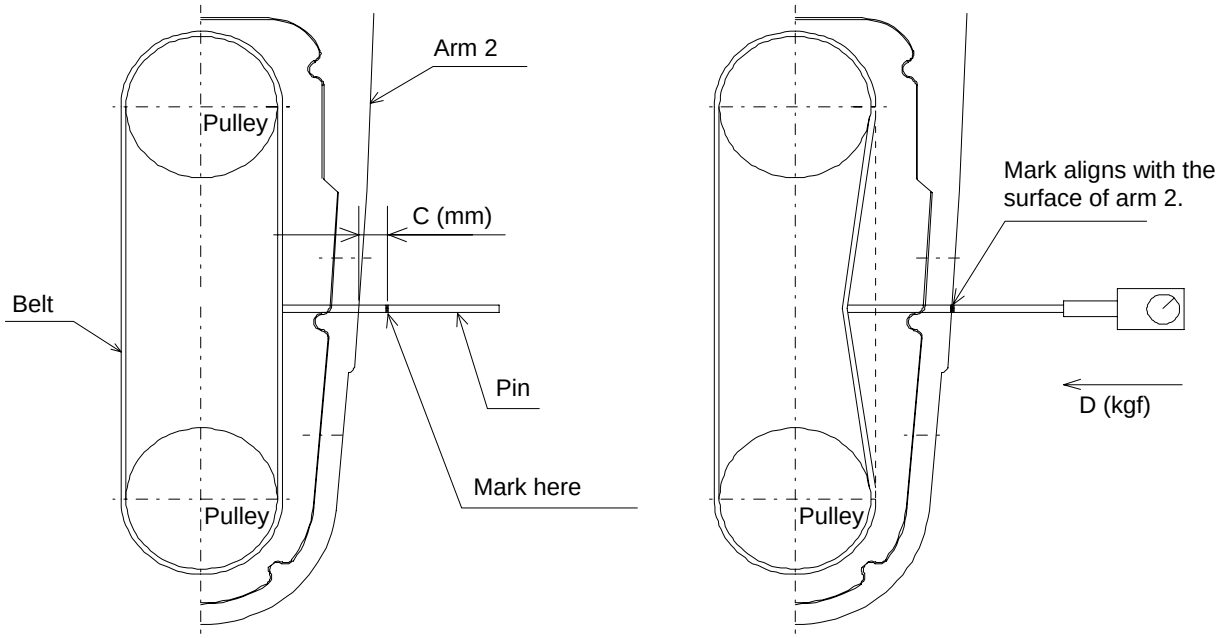

Caution

- Do not use a pin with a sharp tip that may damage the belt.
- Disassembly of the cover generates dust. Before disassembling the cover, move the robot to a location where dust will not cause problem, or cover the robot with a plastic sheet, etc., to prevent dust from scattering.

6.3.6 Adjusting the Belt Tension for the Vertical Axis

(1) Loosen the four M5 nuts [4] slightly, making sure the fastened points do not become overly loose.
(2) Loosen the lock nut [5], and then turn the bolt with urethane stopper [6] to tension the belt properly.
(3) Check the belt tension by referring to 6.3.4, “Checking the Belt Tension for the Vertical Axis.”
(4) Tighten the M5 nuts [4] loosened in step 1, and then tighten the lock nut [5].
(5) Check the belt tension again by referring to 6.3.4, “Checking the Belt Tension for the Vertical Axis.”
(If the deflection has changed, perform the adjustment again.)

6.3.7 Adjusting the Belt Tension for the Rotational Axis

(1) Loosen the bolts [1] and [2] (four pieces each) slightly, making sure the fastened points do not become overly loose.
(2) Turn the bolts [3] (two pieces) to tension the belt.
(3) Check the belt tension by referring to 6.3.5, “Checking the Belt Tension for the Rotational Axis.”
(4) Tighten the bolts [1] and [2] loosened in step 1.
(5) Finally, tighten the bolts [3] securely.
(6) Check the belt tension again by referring to 6.3.5, “Checking the Belt Tension for the Rotational Axis.”
(If the deflection has changed, perform the adjustment again.)

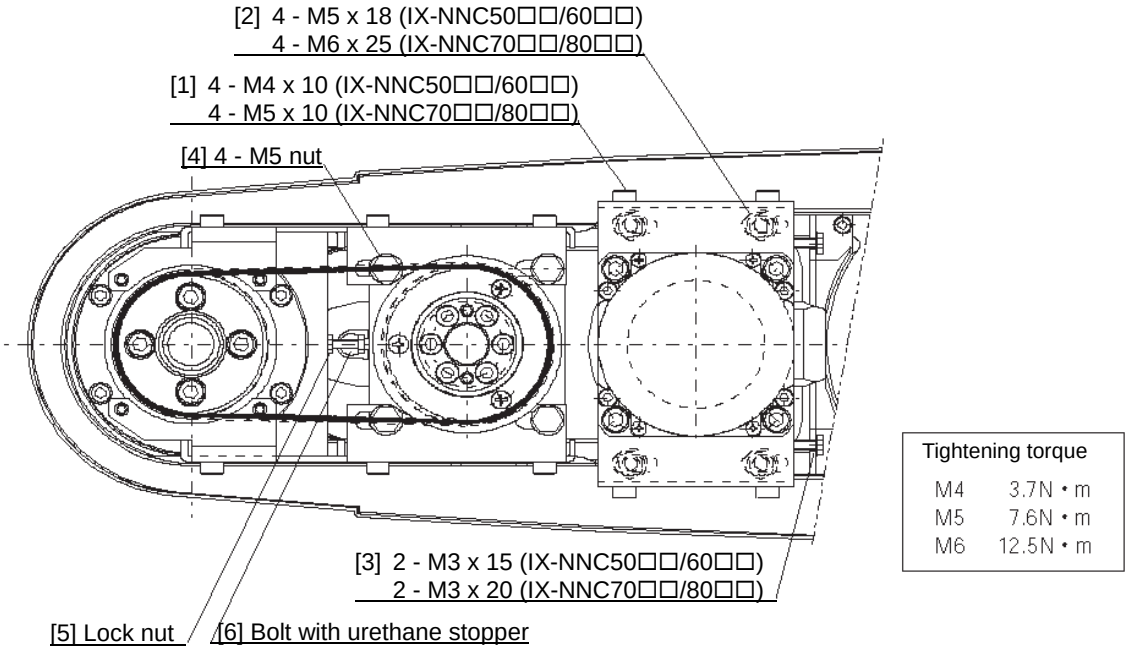

Caution

- Be careful not to overtighten screws [1], [2] and [4].
- After fixing the axis center, be sure to confirm once again that the deflection meets the specified value.
- Disassembly of the cover generates dust. Before disassembling the cover, move the robot to a location where dust will not cause problem, or cover the robot with a plastic sheet, etc., to prevent dust from scattering.

6.3.8 Installing the Cover

(1) Place the cover on the robot and connect the connectors, cables and air tubes installed as illustrated below. (Absolute reset, as described on the following page, is not required after the belt tension is only checked.)

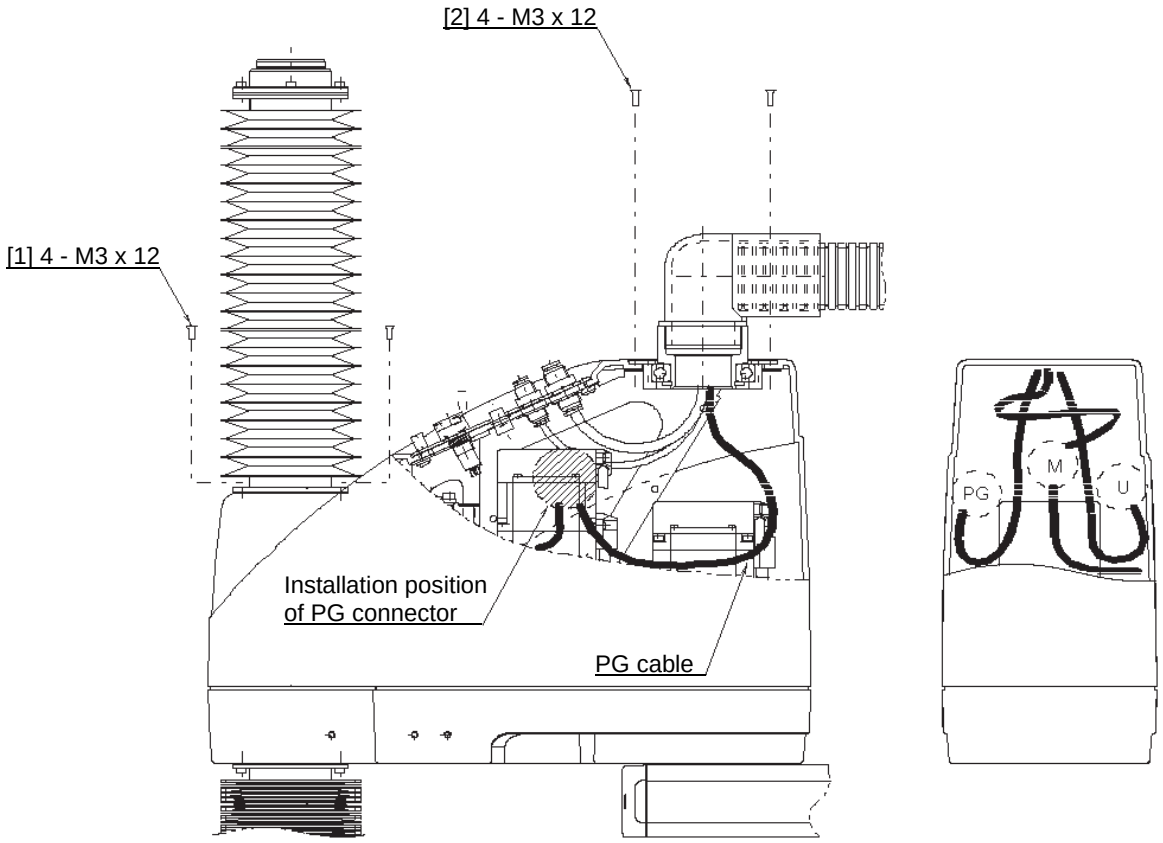

⚠ Caution

- Check the marking tubes to prevent improper connections.
- Be careful not to bend the air tubes.
- Be careful not to let the cables contact the pulley.
- Check if the connectors are fully inserted.
- Be careful not to pinch the cables.
- Disassembly of the cover generates dust. Before disassembling the cover, move the robot to a location where dust will not cause problem, or cover the robot with a plastic sheet, etc., to prevent dust from scattering.

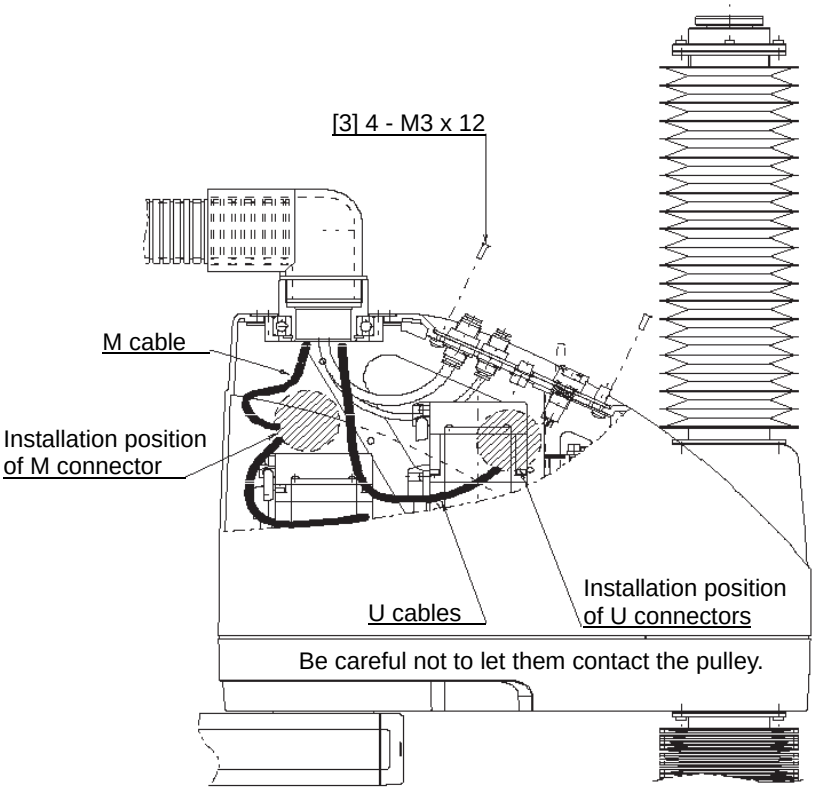

(2) Install the M4 setscrew on the side face of arm 2.

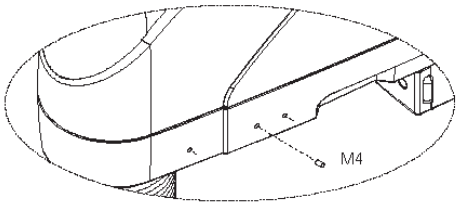

(3) Perform an absolute reset for the rotational axis and vertical axis. This completes the procedure for installation of the cover.
(Refer to 6.5, “Absolute Reset Procedure.”)

⚠ Caution

- Check the marking tubes to prevent improper connections.
- Be careful not to bend the air tubes.
- Be careful not to let the cables contact the pulley.
- Check if the connectors are fully inserted.
- Be careful not to pinch the cables.
- Perform an absolute reset for the rotational axis and vertical axis only after adjustment of the belt tension.
- Disassembly of the cover generates dust. Before disassembling the cover, move the robot to a location where dust will not cause problem, or cover the robot with a plastic sheet, etc., to prevent dust from scattering.

6.4 Battery Replacement

6.4.1 Preparation

The following items are required when replacing the batteries:

- Phillips screwdriver
- New dedicated batteries for IX: AB-3 (4 pieces)

Before replacing the batteries, turn off the power to the controller, control panel and other relevant units.

Warning **Caution**

- Performing inspection or maintenance without fully understanding the details of work may result in a serious accident.
- Display a “Work in Progress” sign so that other operators will not operate the controller, operation panel, etc.
- Use dedicated batteries for IX. Batteries for the old model (IH) cannot be used.
- Disassembly of the cover generates dust. Before disassembling the cover, move the robot to a location where dust will not cause problem, or cover the robot with a plastic sheet, etc., to prevent dust from scattering.

6.4.2 Battery Replacement Procedure

(1) Remove the countersunk head screws [1] (six pieces) and detach the cover (base).
(2) Remove the batteries from the battery holder.
(3) Remove the battery connectors and connect new batteries.

- After removing the old batteries, quickly connect new batteries (roughly within 5 minutes x number of batteries).
- If new batteries are not connected for a longer period, the rotation data will be lost and an absolute reset will become necessary.
- Replace batteries one axis at a time. If the batteries for all axes are replaced at once, the work may not be completed within the specified time.

(4) Install the batteries into the battery holder.

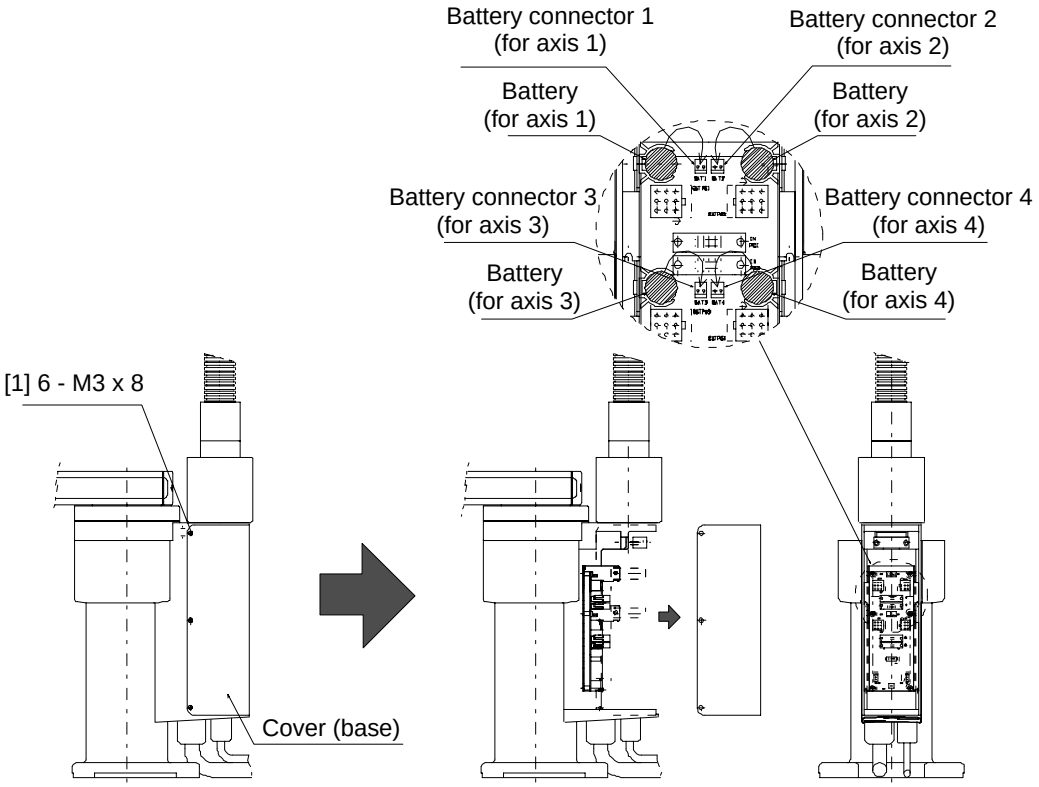

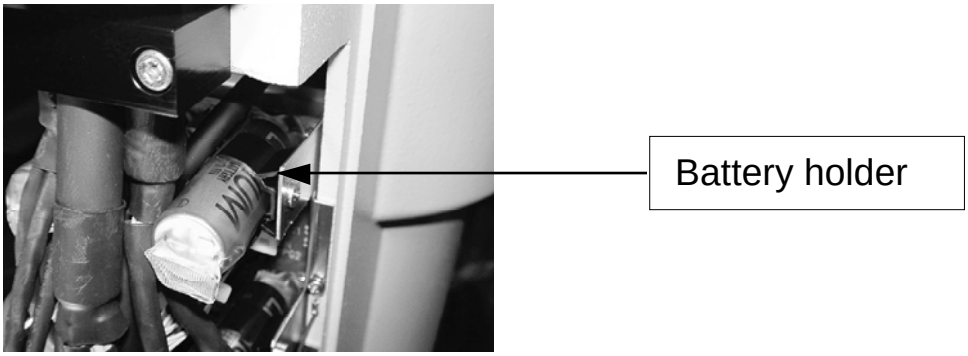

(5) Affix the cover (base) using the countersunk head screws [1] (six pieces) (tightening torque: 0.74 N·m).

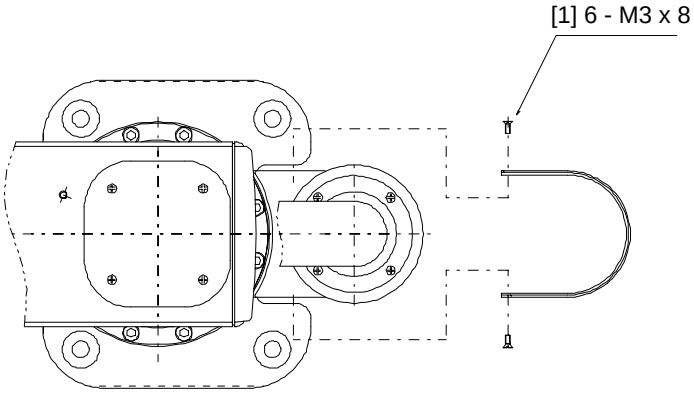

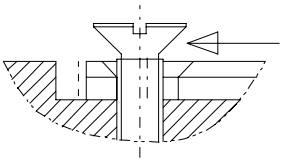

Do not tighten the screws to the specified torque in one go. First tighten the screws to the position shown to the left, and while pushing the cover in the direction of the arrow tighten the screws on both sides evenly to ensure tight sealing.

Caution

- When installing the cover (base), be careful not to pinch the cables inside.
- Disassembly of the cover generates dust. Before disassembling the cover, move the robot to a location where dust will not cause problem, or cover the robot with a plastic sheet, etc., to prevent dust from scattering.

6.5 Absolute Reset Procedure

6.5.1 Preparation for Absolute Reset

The following jig is required when performing an absolute reset: (Included with robot at time of shipment).

- Absolute reset adjustment jig Model: JG-1 (IX-NNC50□□/60□□)
  JG-3 (IX-NNC70□□/80□□)

Connect the cables for the robot, controller and PC, so the robot can be operated from the PC.
Before commencing the work, always confirm that the emergency-stop switch is functioning properly.
An absolute reset adjustment jig is always required when performing an absolute reset of the rotational axis or vertical axis. However, the jig is not always necessary when performing an absolute reset of arm 1 or arm 2.
(Rotation data can be reset as long as a positioning accuracy of “center of positioning mark label ±1 graduation” is ensured.)

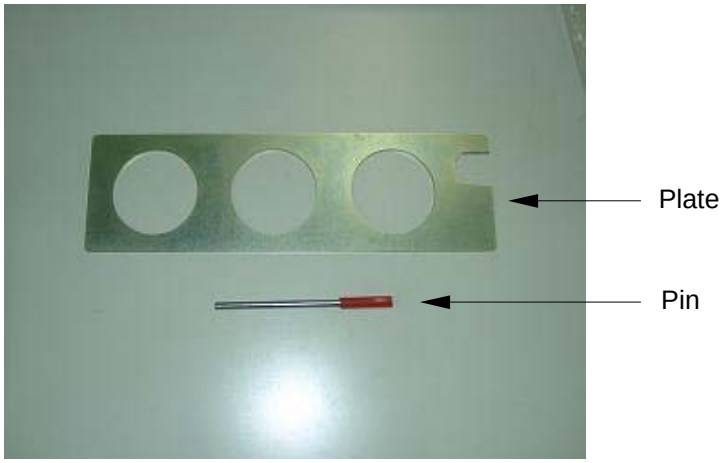

Absolute reset adjustment jig (type: JG-1)

Warning

- Performing inspection or maintenance without fully understanding the details of work may result in a serious accident.
- Display a “Work in Progress” sign so that other operators will not operate the controller, operation panel, etc.

6.5.2 Starting the Absolute Reset Menu

(1) Open the absolute reset window from the PC software.

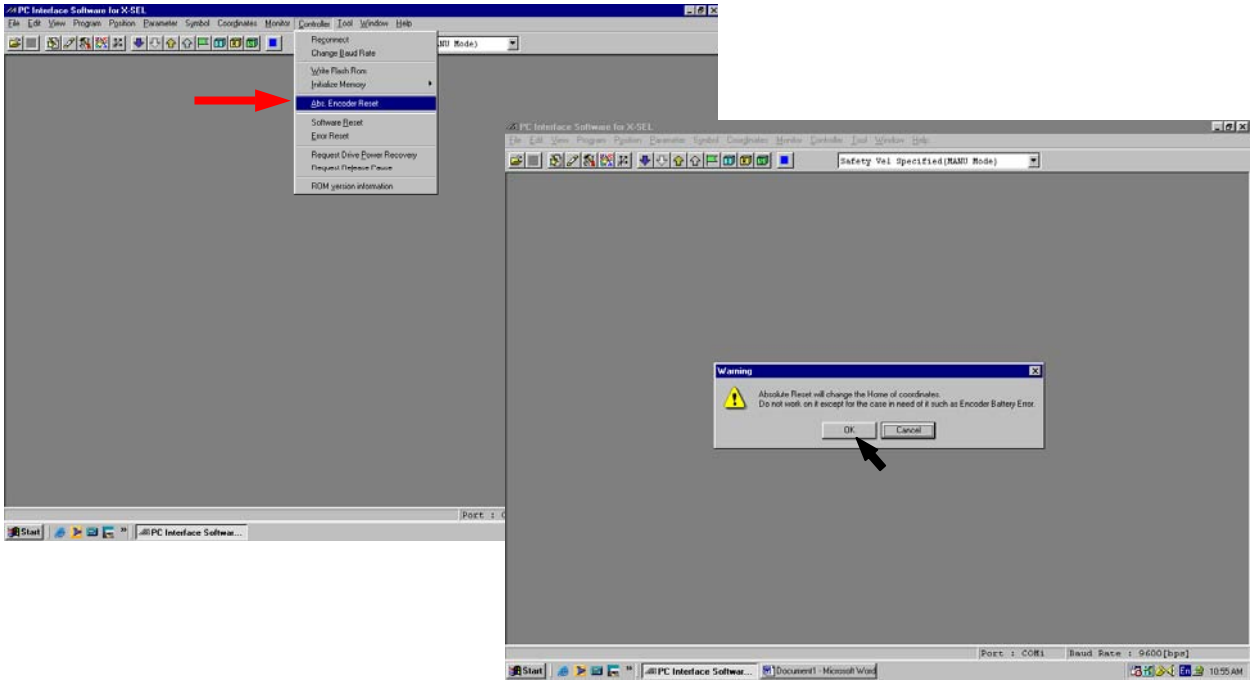

(2) The absolute reset window opens.

- One of three absolute reset screens—for arm 1, arm 2 and rotational axis + vertical axis—is displayed when a corresponding tab is clicked.

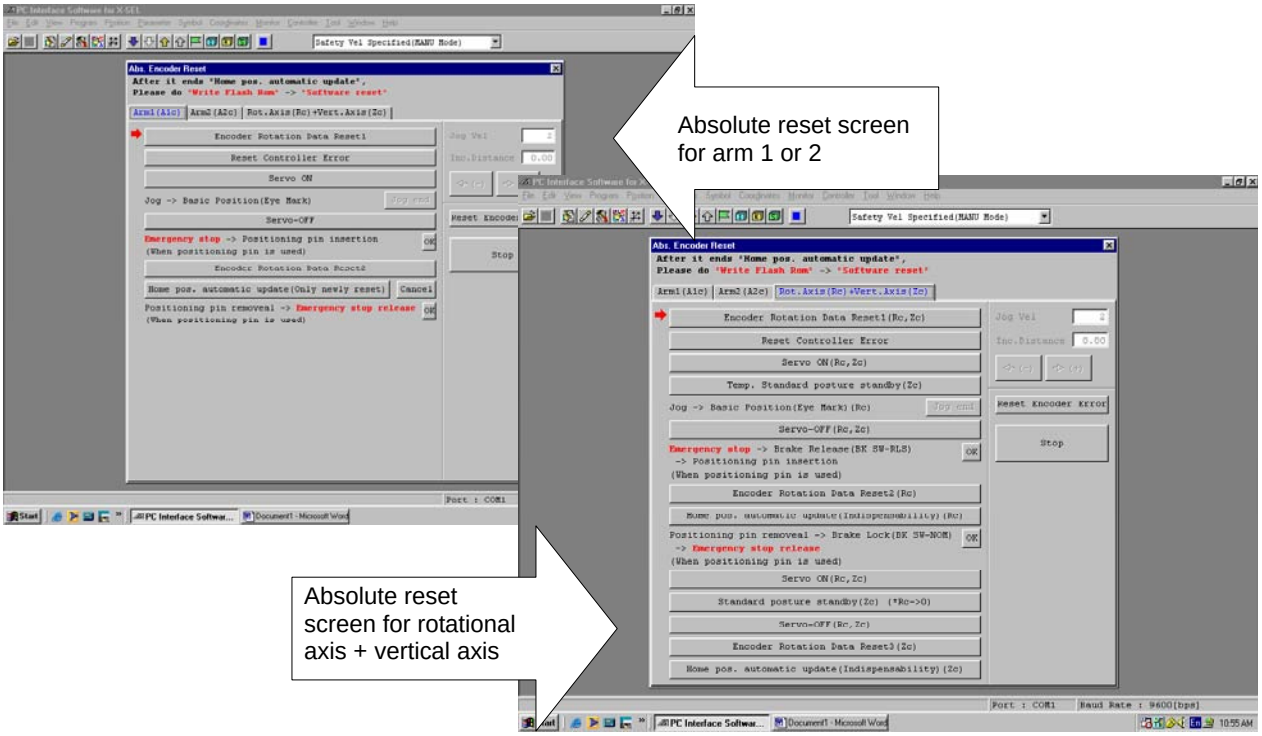

6.5.3 Absolute Reset Procedure for Arm 1 or 2

(1) Click the “Encoder Rotation Data Reset1” button.

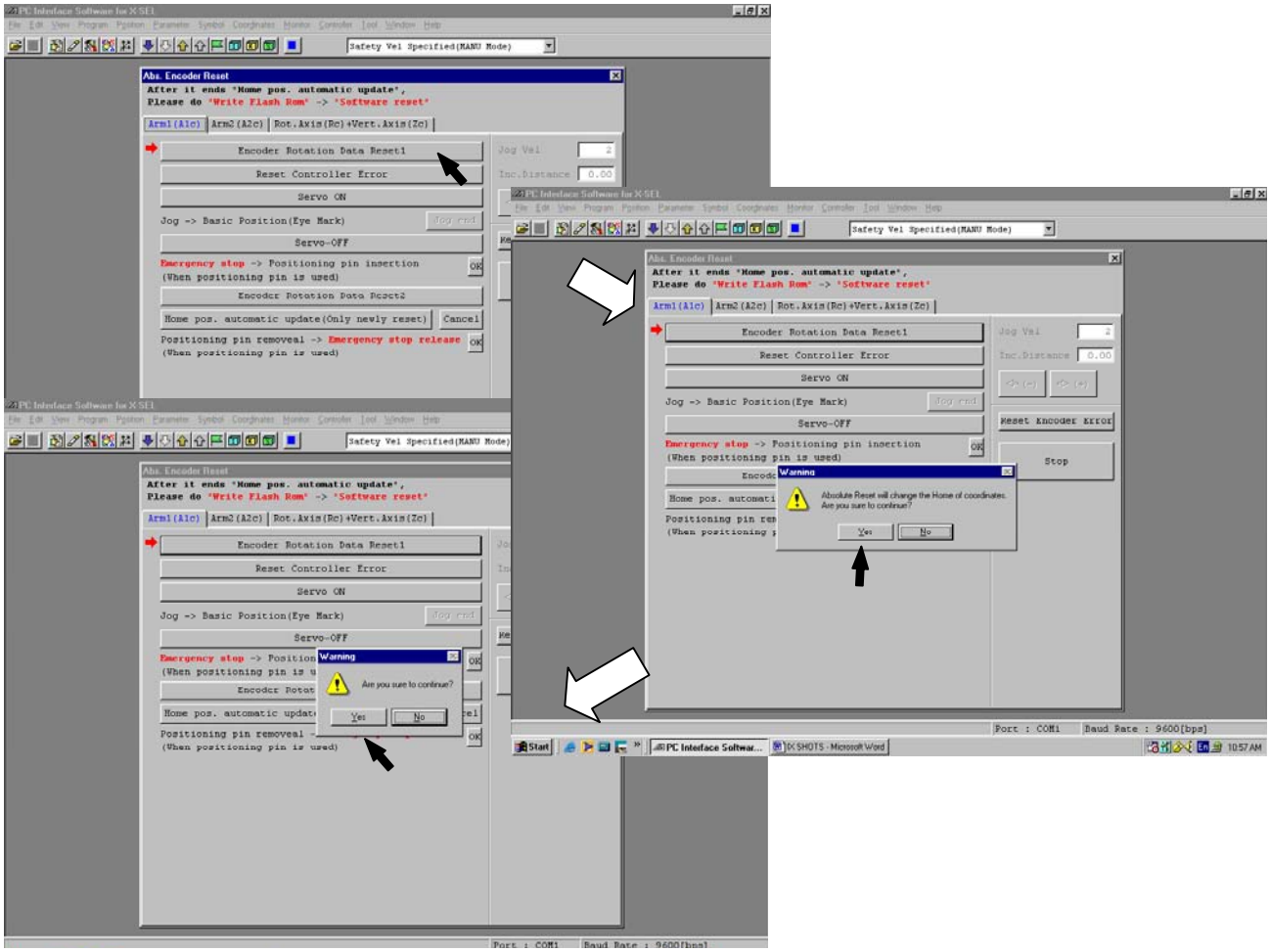

(2) Click the “Reset Controller Error” button.

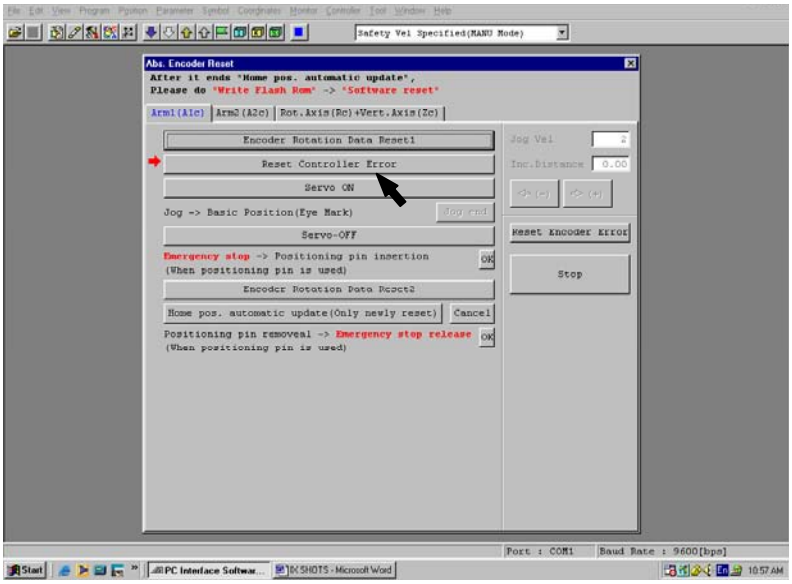

(3) Click the “Servo ON” button.

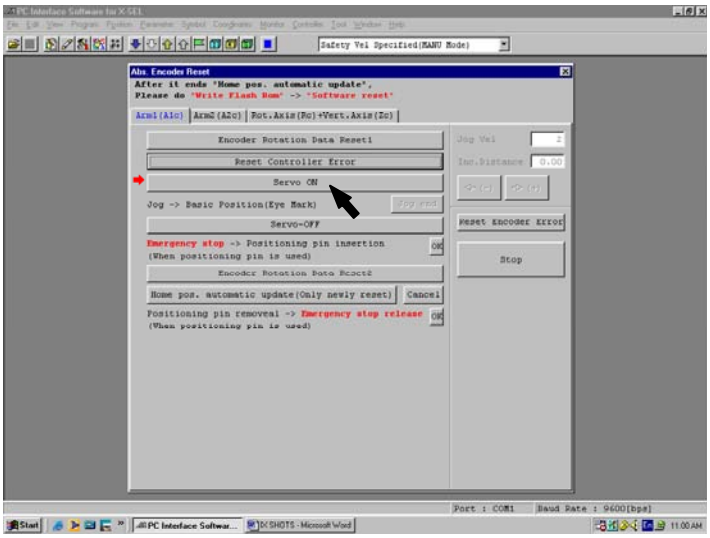

(4) Jog the arm to near the reference position (see reference position drawing in step 7), and click the “Jog end” button.

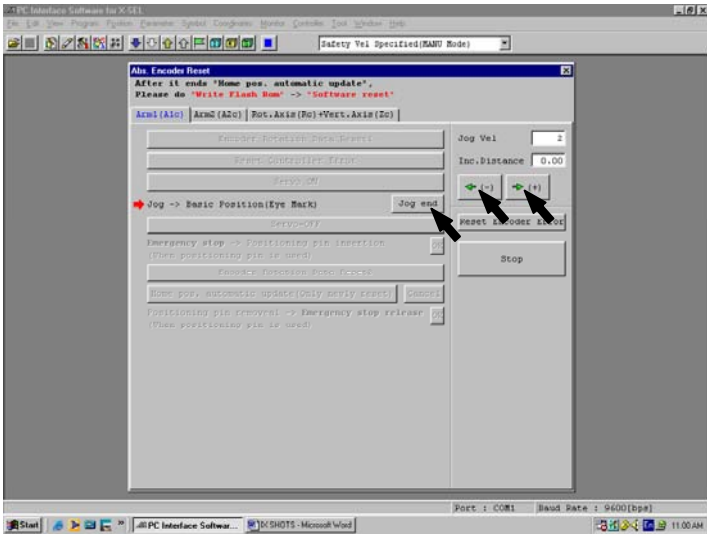

(5) Click the “Servo-OFF” button.

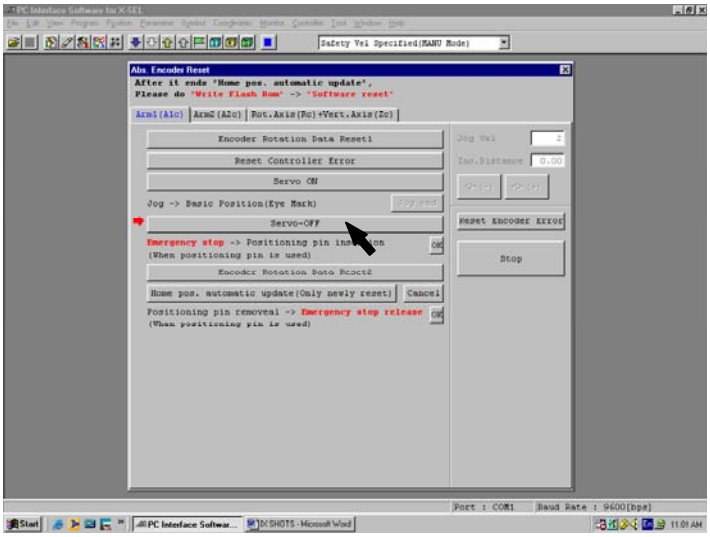

(6) Press the emergency-stop switch.

(7) Set an adjustment jig (pin) in arm 1 or 2 to fix the arm at the reference position.
- Set the jig after confirming that the emergency-stop switch is pressed.
- Set the jig after adjusting the arm to the reference position, using the positioning mark label as a guide.
- Arm 1 has a cover (not arm 2), which is fixed with setscrews. Remove the setscrews and detach the cover before setting the jig.
- It is recommended that an adjustment jig be used to perform an absolute reset. With arm 1 or 2, however, rotation data can be reset as long as a positioning accuracy of “center of positioning mark label ±1 graduation” is ensured.

Arm 1

Arm 2

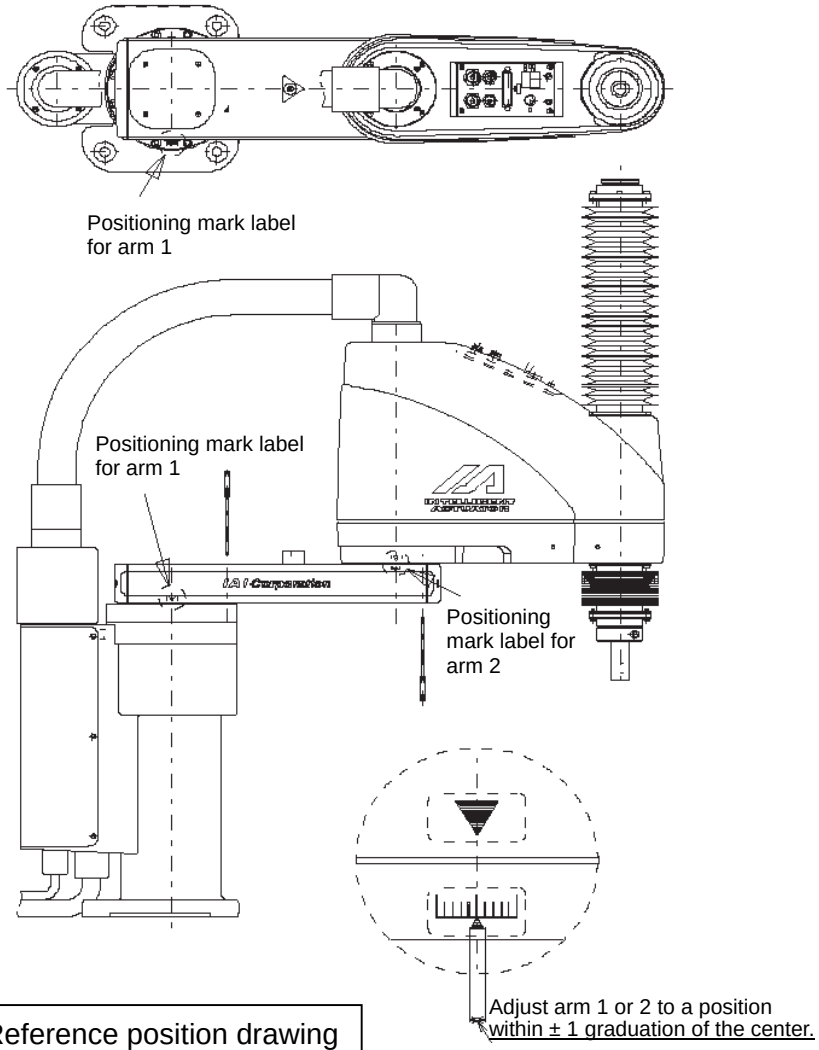

Reference position drawing

Warning

- Always press the emergency-stop switch before setting an adjustment jig. Failure to do so may cause the robot to malfunction and result in a serious accident.

(8) Click the “OK” button.

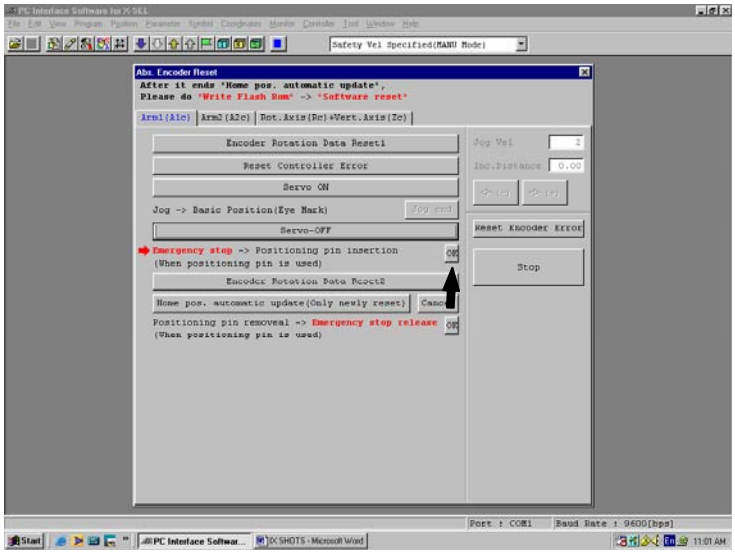

(9) Click the “Encoder Rotation Data Reset2” button.

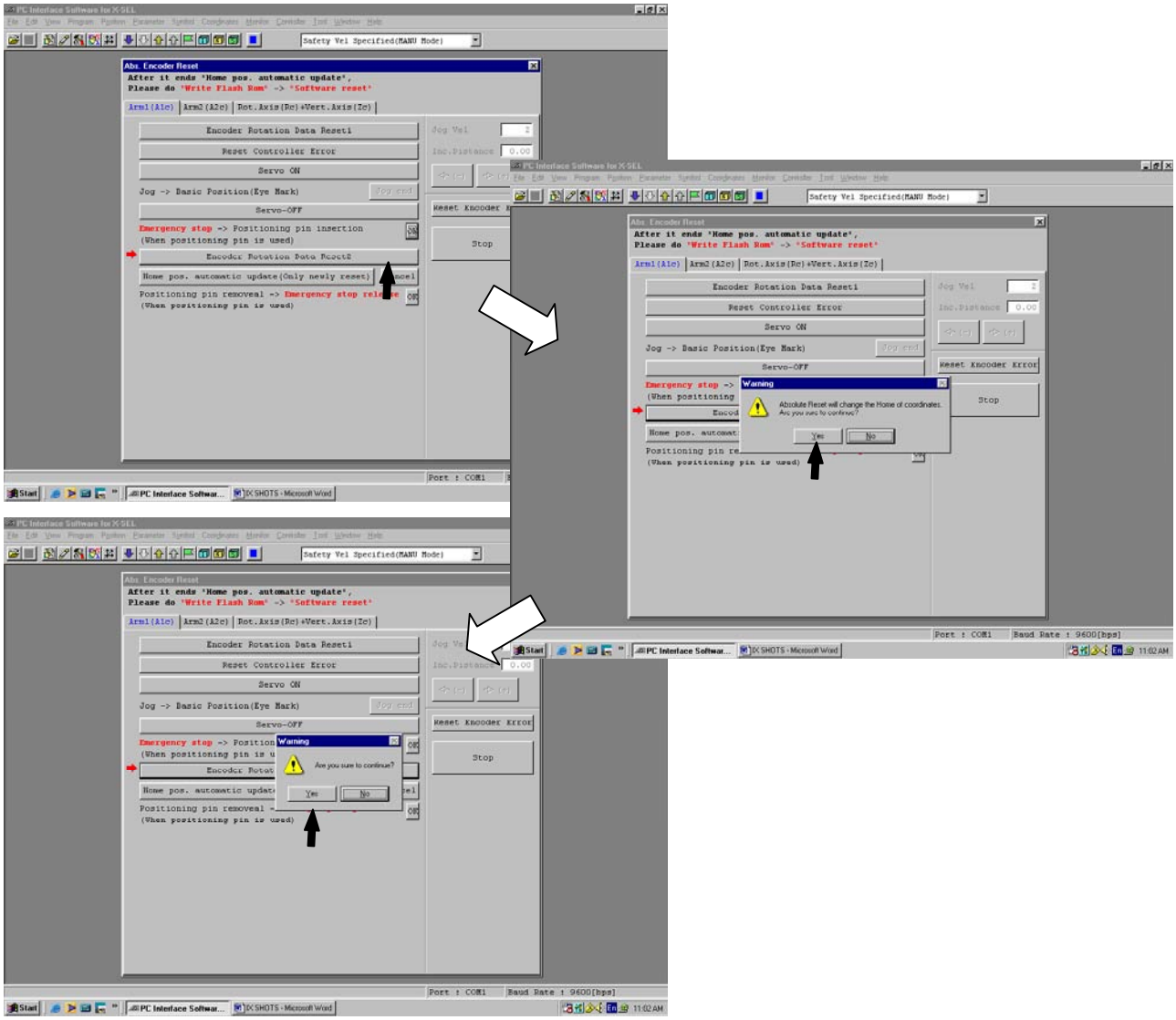

(10) Remove the adjustment jig.
- If you are working on arm 1, install the cover and secure it with the setscrews (not required for arm 2).

(11) Release the emergency-stop switch.

(12) Click the “OK” button.

- An arrow is shown next to the “Home pos. automatic update” button. Do not set this item. (In particular, be sure this item is not set when performing an absolute reset without using a jig).
- If the home position is updated automatically when a reset is performed without using an adjustment jig, the home position will become offset.
- If the home position has been updated by mistake, perform an absolute reset again using an adjustment jig. (This time, end the procedure before home position automatic update).
- Always click the “OK” button after removing the jig and releasing the emergency-stop switch.

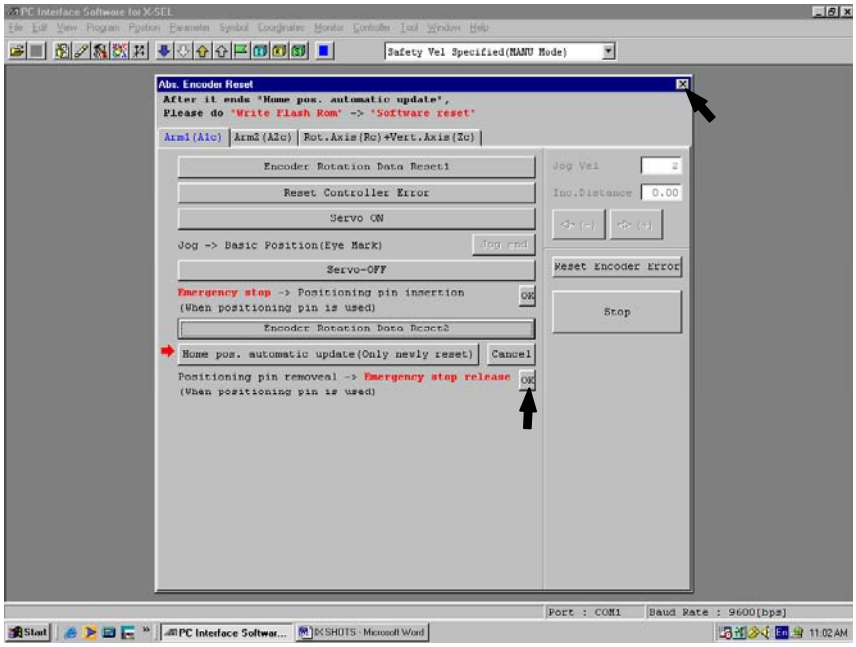

(13) Click “X” in the top right-hand corner to exit the absolute reset window.
- Once the absolute reset is complete, be sure to reset the controller.

Caution

- Be careful not to perform a reset using an incorrect sequence, since it may cause the arm position to become offset.
- When home position automatic update has been performed, be sure to write the flash ROM.

6.5.4 Absolute Reset Procedure for the Rotational Axis + Vertical Axis

(1) Click “Encoder Rotation Data Reset1” button.

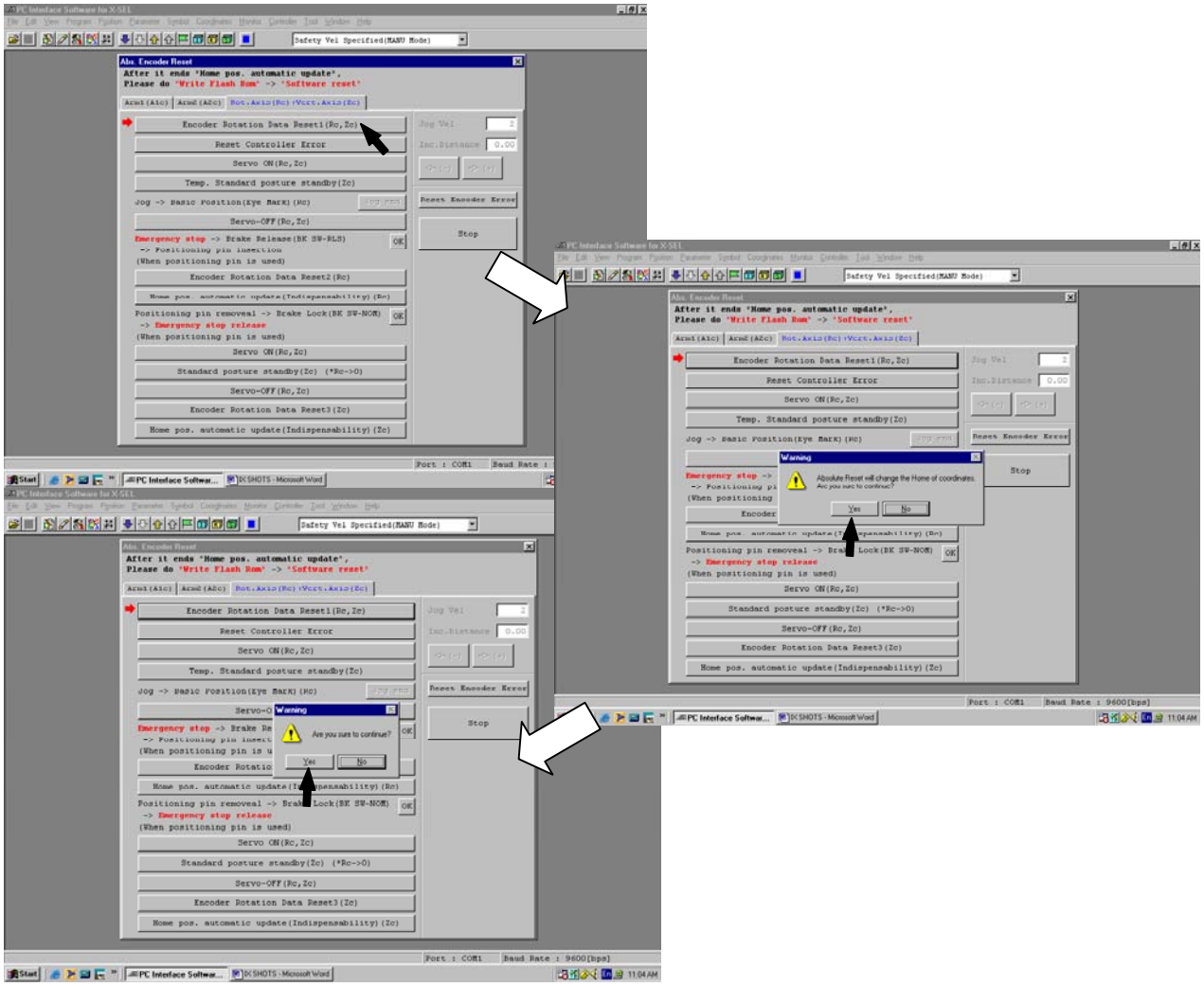

(2) Click the “Reset Controller Error” button.

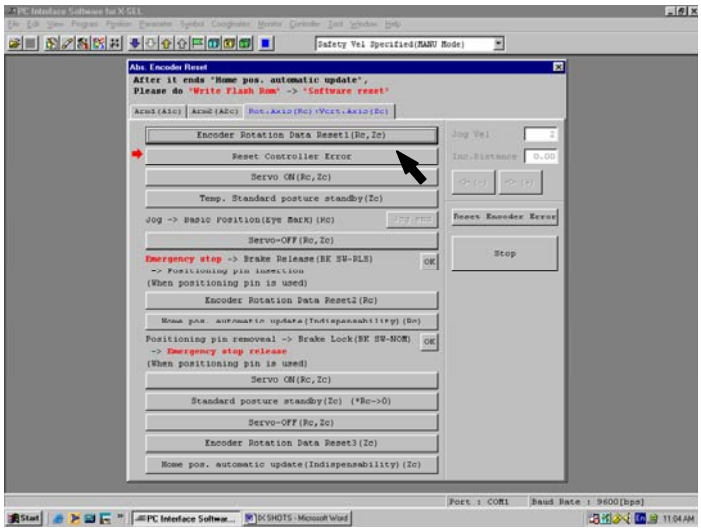

(3) Click the “Servo ON” button.

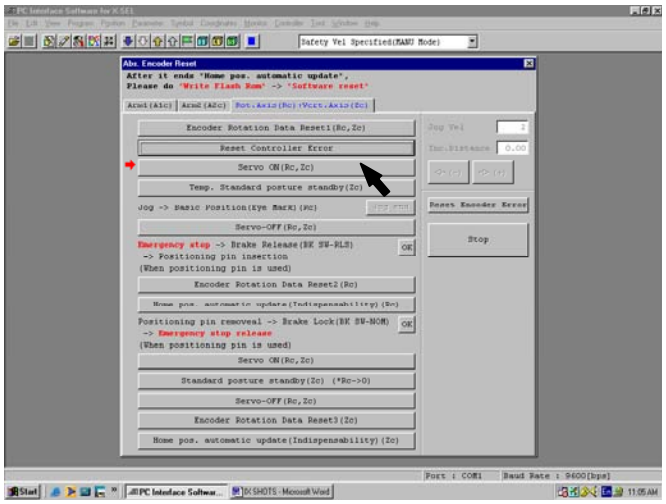

(4) Click the “Temp. Standard posture standby” button.

- The vertical axis returns to its home position. Exercise caution so as not to be injured by the axis during movement.

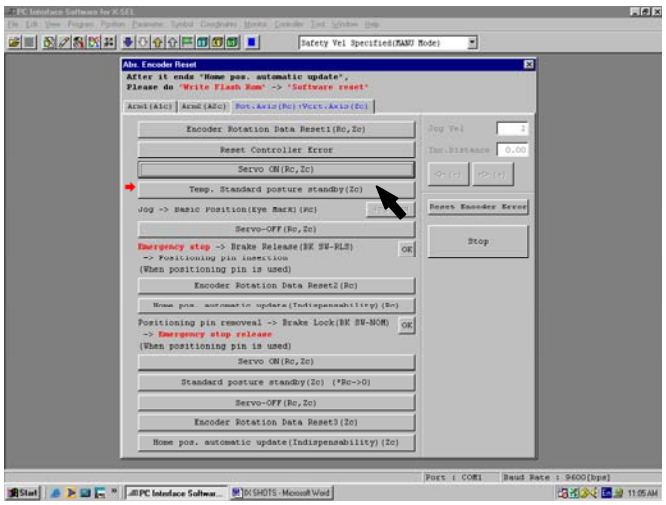

(5) Jog the rotational axis to the reference position (see reference position drawing in step 8), and click the “Jog end” button.

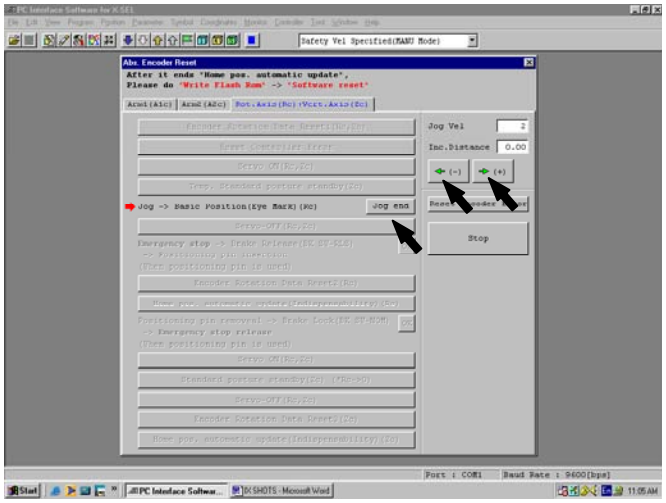

(6) Click the “Servo-OFF” button.

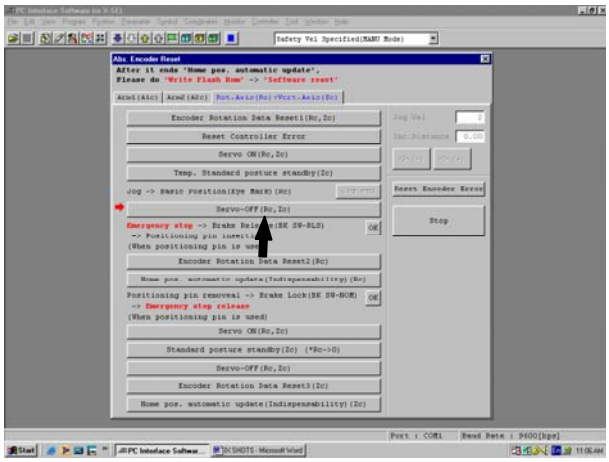

(7) Press the emergency-stop switch.

(8) Affix the rotational axis at the reference position by setting the plate and pin of the adjustment jig as illustrated below.

- Set the jig after confirming that the emergency-stop switch is pressed.
- Set the jig after adjusting the rotational axis to the reference position, using the positioning mark label as a guide.
- The top face of the stopper should roughly align with the bottom face of arm 2.

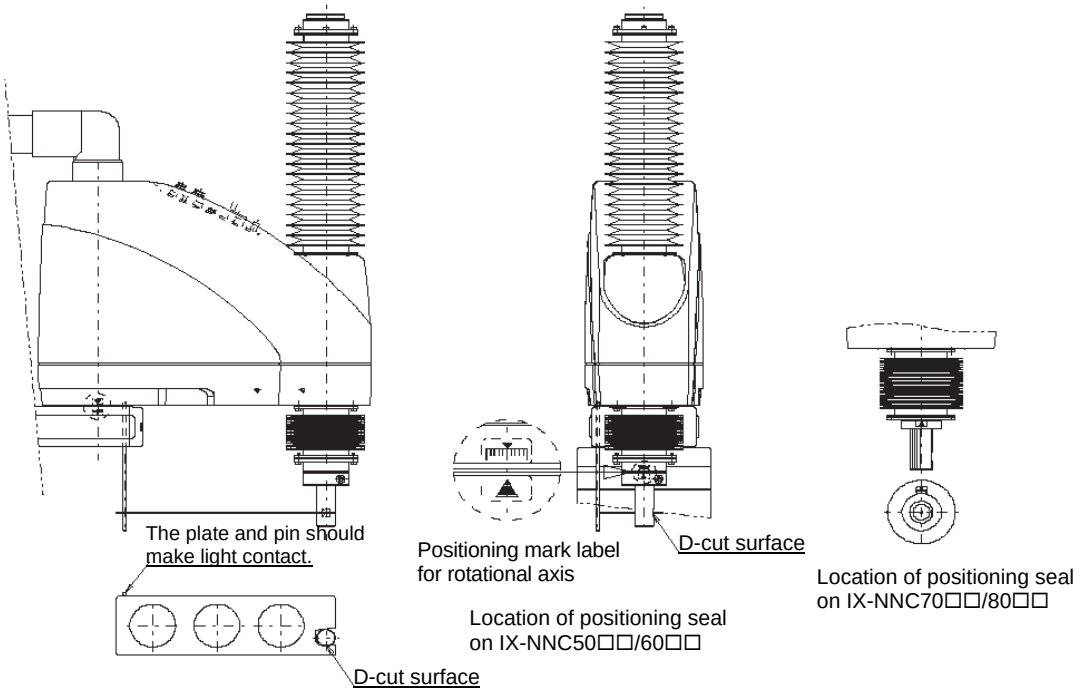

Warning

- Always press the emergency-stop switch before setting an adjustment jig. Failure to do so may cause the robot to malfunction and result in a serious accident.
- Pay attention to the orientation of the D-cut surface of the plate jig.

(9) Click the “OK” button.

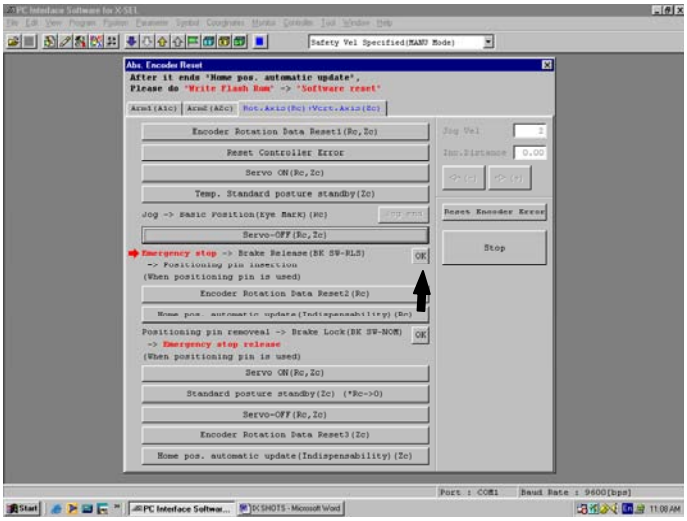

(10) Click the “Encoder Rotation Data Reset2” button.

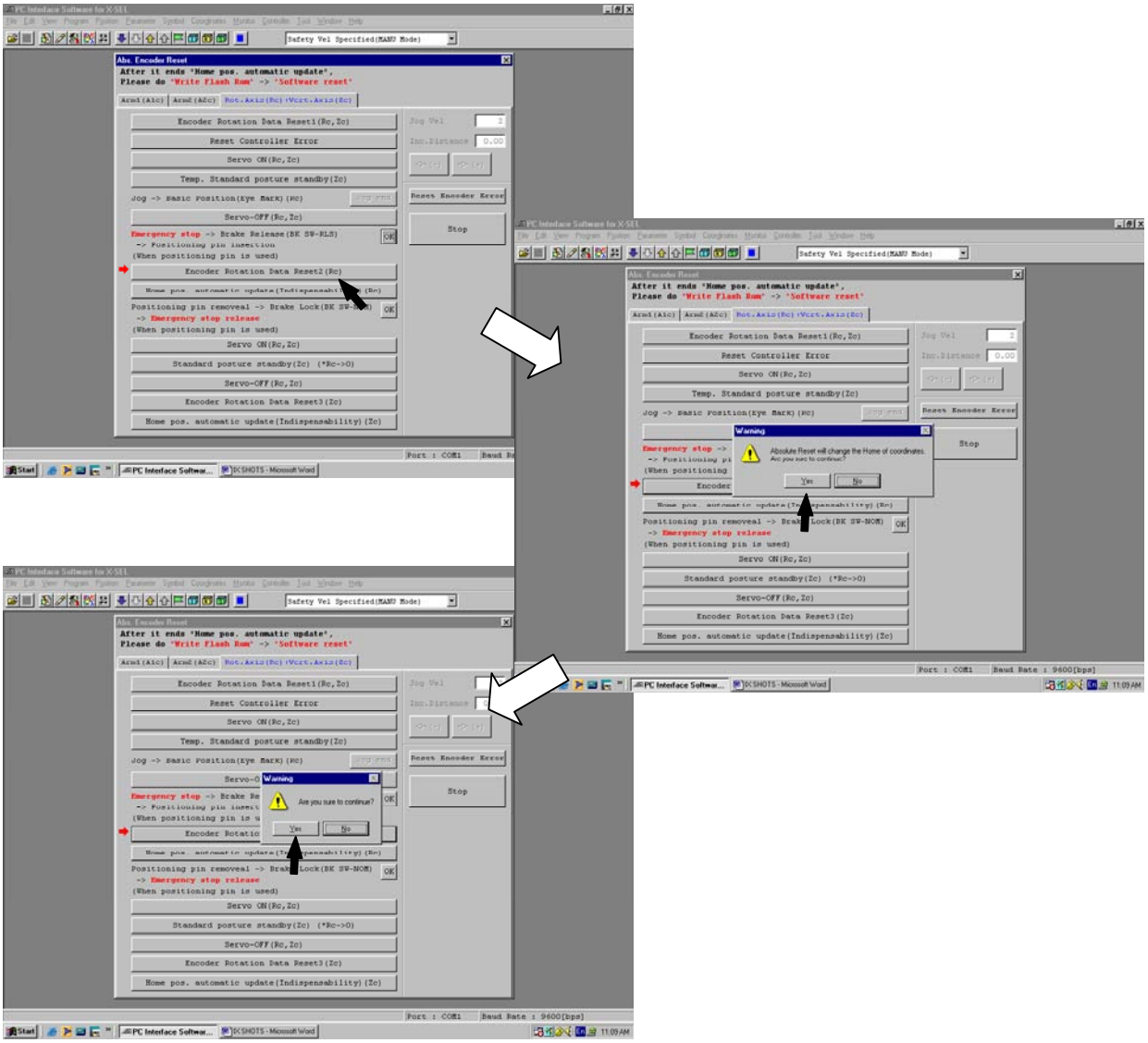

(11) Click the “Home pos. automatic update” button.

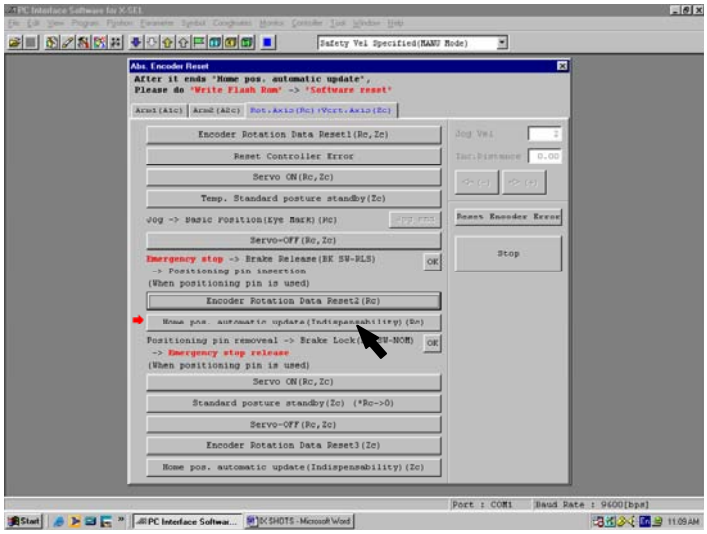

(12) Remove the adjustment jig.

(13) Release the emergency-stop switch.

(14) Click the “OK” button.

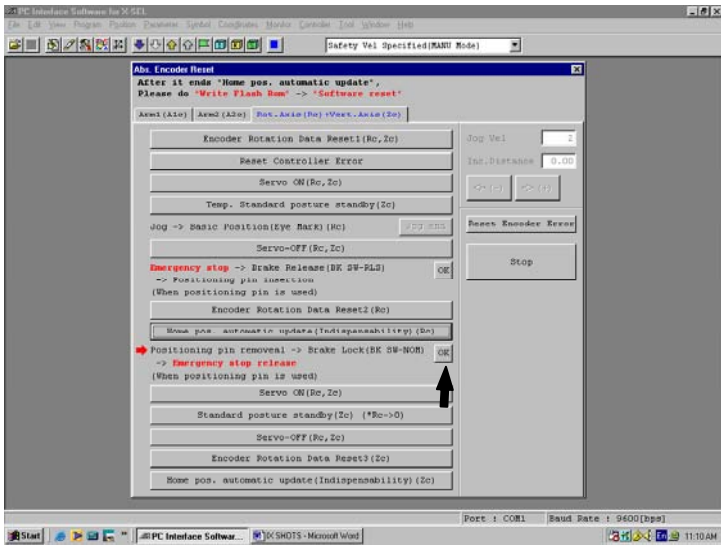

(15) Click the “Servo ON” button.

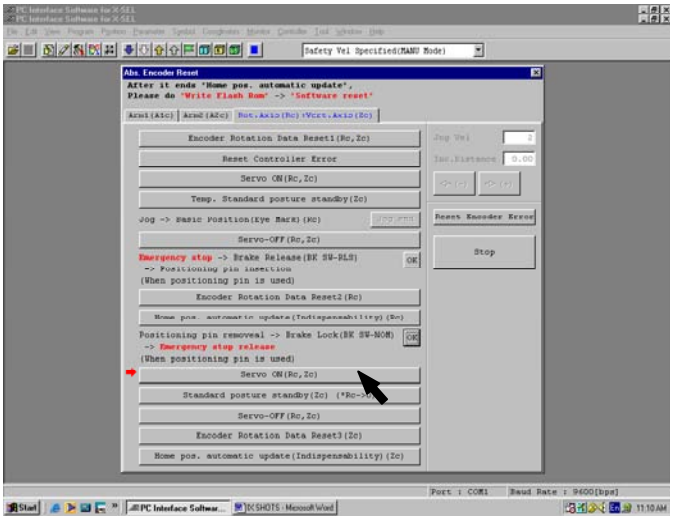

(16) Click the “Standard posture standby” button.

- The vertical axis returns to its home position. Exercise caution so as not to be injured by the axis during movement.

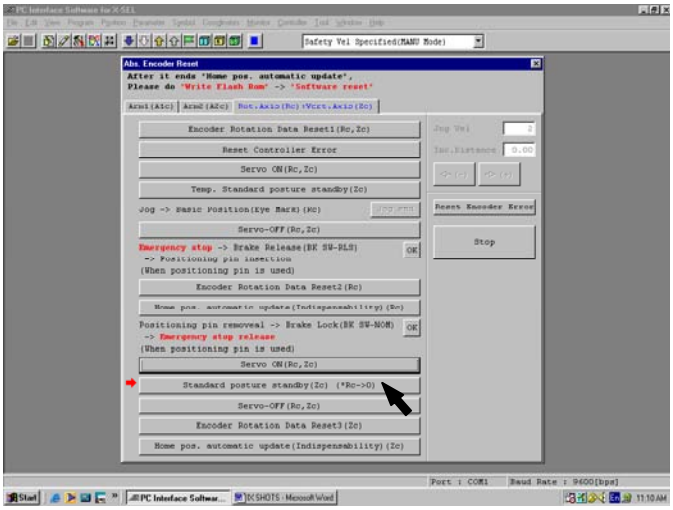

(17) Click the “Servo-OFF” button.

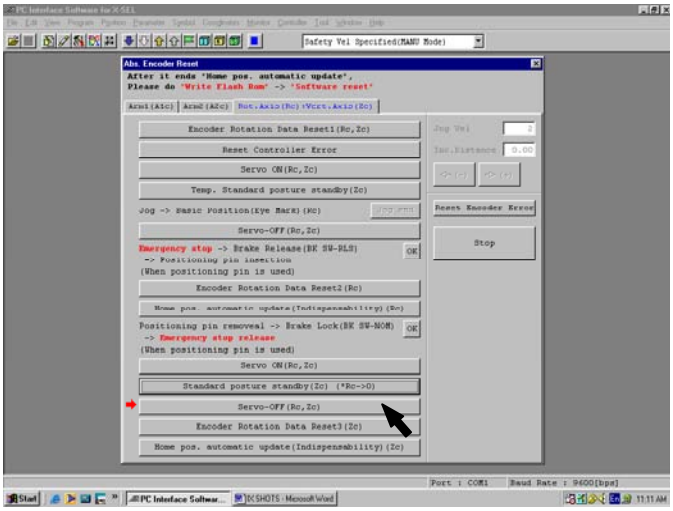

(18) Click the “Encoder Rotation Data Reset3” button.

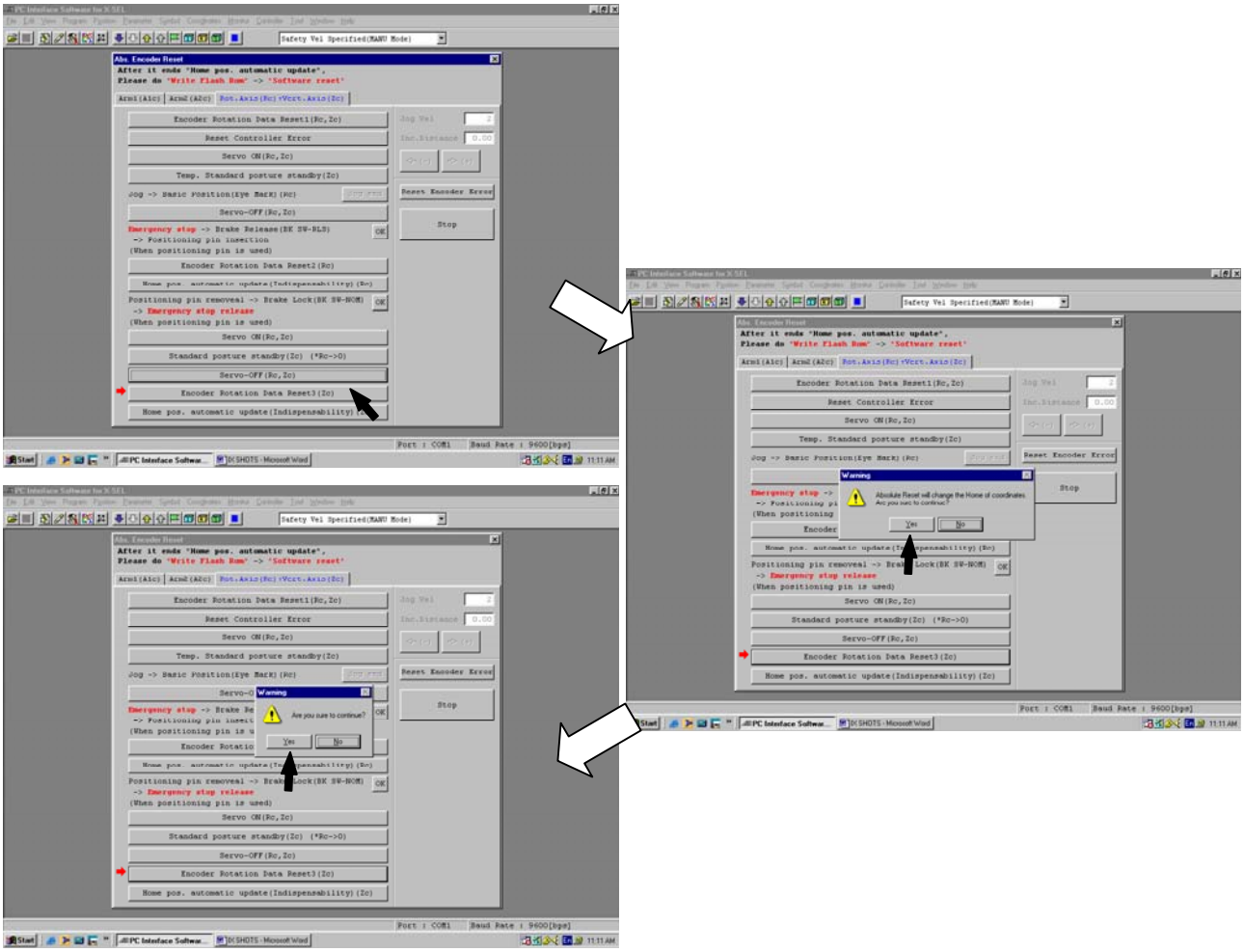

(19) Click the “Home pos. automatic update” button, and then click “X” in the top right-hand corner to exit the absolute reset window.

- Once the absolute reset is complete, be sure to write the flash ROM and reset the controller.

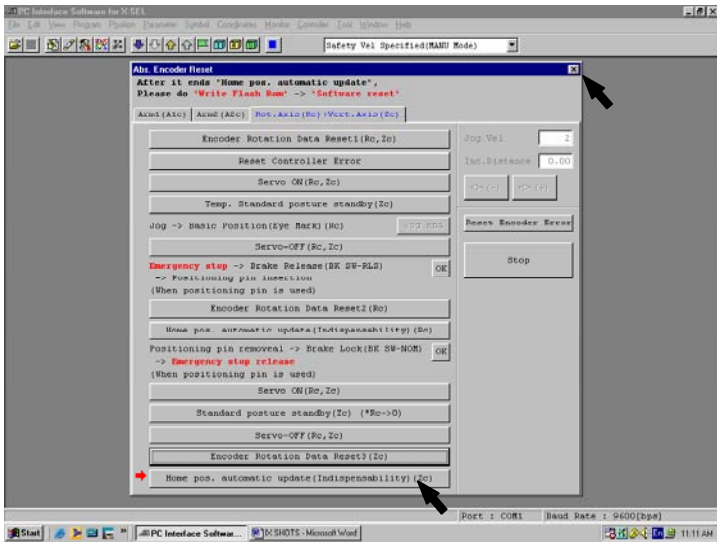

6.5.5 Writing the Flash ROM

(1) Following an absolute reset of the rotational axis and vertical axis, the following screen opens when the absolute reset window is closed. Click the “Yes” button.

- Clicking “Yes” writes the information in the flash ROM.
- The flash ROM must also be written when home position automatic update has been performed for arm 1 or 2.

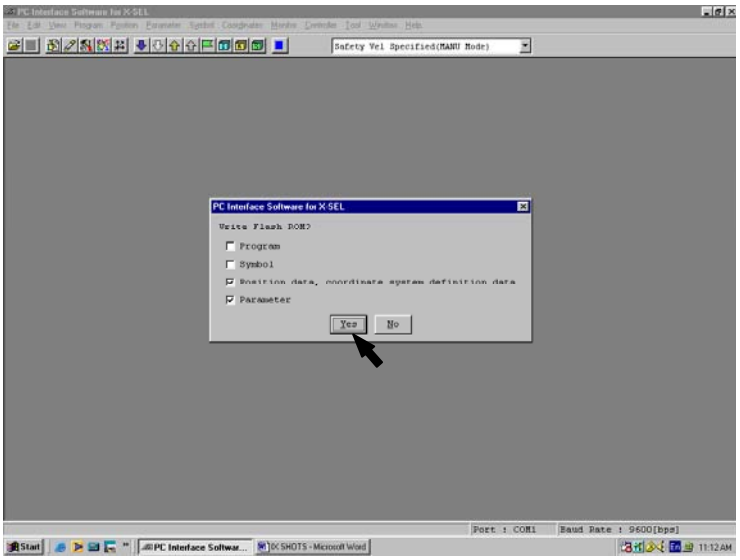

(2) When the writing of flash ROM is complete, the following screen is displayed. Click the “Yes” button.

- The controller is restarted and the software is reset.

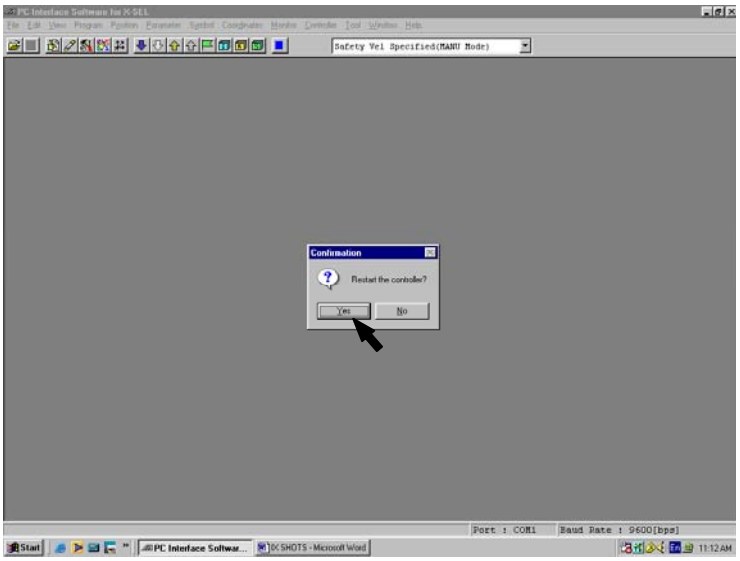

6.5.6 Resetting the Controller

(1) Select “Software Reset” from the Controller menu on the tool bar.

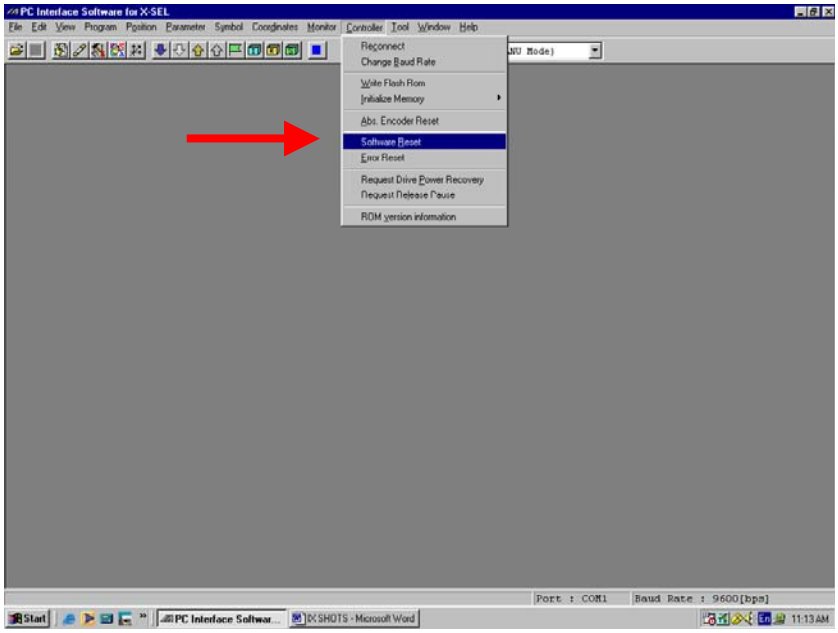

(2) Click the “Yes” button. The controller is reset and restarted.

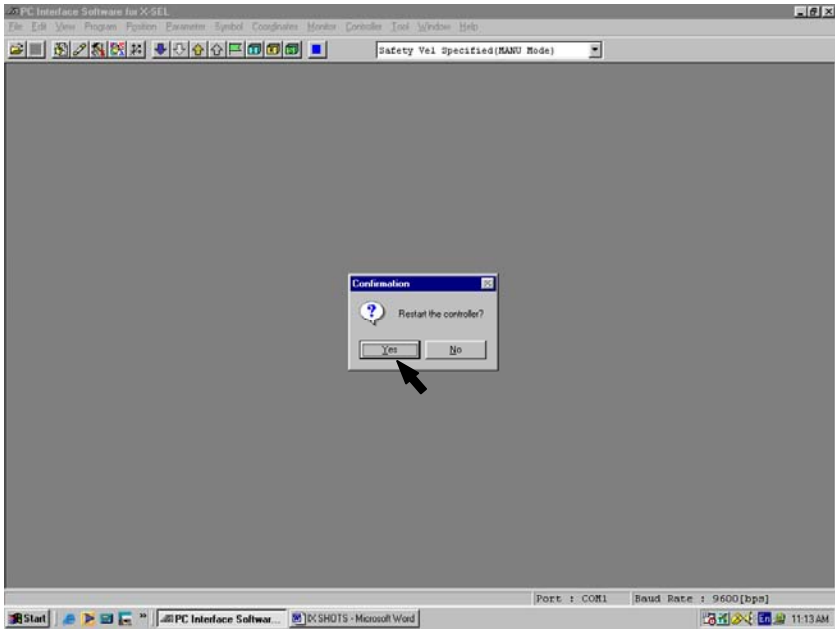

7 Specifications

7.1 Specification Table

IX-NNC50□□ (Arm Length 500, Clean-room Specification)

Item			Specifications
Type			IX-NNC50□□-□□L-T1
Degree of freedom			Four degrees of freedom
Overall arm length		mm	500
Arm 1 length		mm	250
Arm 2 length		mm	250
Drive method	Axis 1 (arm 1)		AC servo motor + Speed reducer
	Axis 2 (arm 2)		AC servo motor + Speed reducer
	Axis 3 (vertical axis)		AC servo motor with brake + Belt + Ball-screw spline
	Axis 4 (rotational axis)		AC servo motor with brake + Speed reducer + Belt + Spline
Motor capacity	Axis 1 (arm 1)	W	400
	Axis 2 (arm 2)	W	200
	Axis 3 (vertical axis)	W	200
	Axis 4 (rotational axis)	W	100
Movement range	Axis 1 (arm 1)	degree	±120
	Axis 2 (arm 2)	degree	±145
	Axis 3 (vertical axis) (*1)	mm	200 (Optional: 300)
	Axis 4 (rotational axis)	degree	±360
Maximum operating speed (*2)	Axis 1 + Axis 2 (maximum composite speed)	mm/sec	6283
	Axis 3 (vertical axis)	mm/sec	1393
	Axis 4 (rotational axis)	degree/sec	1200
Positioning repeatability (*3)	Axis 1 + Axis 2	mm	±0.010
	Axis 3 (vertical axis)	mm	±0.010
	Axis 4 (rotational axis)	degree	±0.005
Cycle time (*4)			0.47/2 kg
Load capacity	Rated	kg	2
	Maximum	kg	10
Push-in thrust of axis 3 (vertical axis)	Dynamic (*8)	N (kgf)	152 (15.5)
	Static (*9)	N (kgf)	108 (11.0)
Permissible load on axis 4	Permissible moment of inertia (*5)	$kg \cdot m^2$	0.06
	Permissible torque	N·m (kgf·cm)	3.3 (33.6)
Permissible tool diameter (*6)		mm	ϕ100
Origin detection			Absolute
User wiring			D-sub 25-pin connector with 25-core AWG26 shielded cable (socket)
Suction pipe joint			Applicable tube: Outer diameter ϕ12 (inner diameter ϕ8)
Alarm indicator (*7)			One small, red LED indicator (rated voltage: 24 V)
User piping			Two air tubes (outer diameter: ϕ6, inner diameter: ϕ4) (normal service pressure: 0.8 MPa) Two air tubes (outer diameter: ϕ4, inner diameter: ϕ2.5) (normal service pressure: 0.8 MPa)

Item			Specifications
Operating environment	Ambient temperature/humidity		Temperature: 0 to 40°C, humidity: 20 to 85%RH or less (non-condensing)
	Altitude	m	1,000 or less
Noise		dB	73
Robot weight		kg	31.5
Cleanliness class			Class 10 (0.1-μm base, with suction)
Suction rate (*10)		Nl/min	60
Controller	Power supply		230 V 50/60 Hz 8 A
	Allowable supply voltage fluctuation	%	±10
	Overvoltage category (IEC60664-1)		Category III
	Pollution degree (IEC60664-1)		Pollution degree 3

*1 To move the robot horizontally at high speed, perform teaching so that the vertical axis stays as close to the top position as possible. (Fig. 1)
To operate the robot with its vertical axis at the bottom position, the speed and acceleration must be reduced as appropriate. (Fig. 2)
*2 Assuming PTP instruction operation.
*3 Measured at a constant ambient temperature of 20°C.
*4 Measured when the robot is operated at the maximum speed, carrying a rated load of 2 kg.
*5 The permissible moment of inertia converted to a value at the rotational center of axis 4. The offset from the rotational center of axis 4 to the tool's center of gravity is assumed to be 50 mm or less. (Fig. 3)
If the tool's center of gravity is further away from the rotational center of axis 4, the speed and acceleration must be reduced as appropriate.
*6 If the tool exceeds the permissible diameter, it will contact the robot inside the robot's range of movement. (Fig. 4)
*7 To enable the alarm LED indicator, the user must provide a circuit that supplies 24 VDC to the LED terminal in the user connector in response to the controller I/O output signal, etc.
*8 A force of up to three times the dynamic push-in thrust may be applied at any given moment.
*9 The static thrust refers to thrust generated within the robot's range of operation based on a PAPR command.
*10 The level of dust generation will vary depending on the operation pattern. The suction rate may have to be raised if the robot is operated at high speed or high acceleration/deceleration.

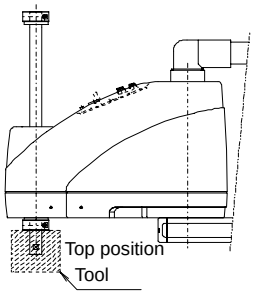

(Fig. 1)

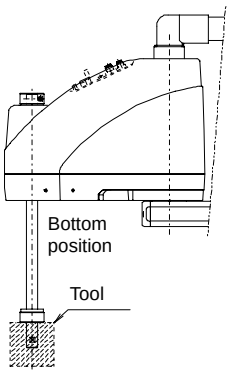

(Fig. 2)

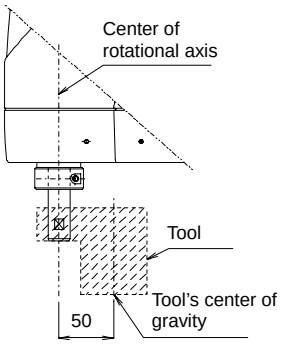

(Fig. 3)

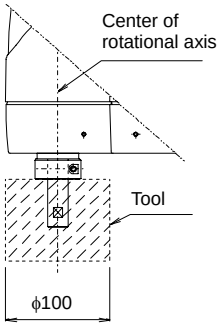

(Fig. 4)

Reference design standards: Annex I to Machine Directives, EN292-1, EN292-2, EN1050, EN60204-1, EN775

IX-NNC60□□ (Arm Length 600, Clean-room Specification)

Item			Specifications
Type			IX-NNC60□□-□□L-T1
Degree of freedom			Four degrees of freedom
Overall arm length		mm	600
Arm 1 length		mm	350
Arm 2 length		mm	250
Drive method	Axis 1 (arm 1)		AC servo motor + Speed reducer
	Axis 2 (arm 2)		AC servo motor + Speed reducer
	Axis 3 (vertical axis)		AC servo motor with brake + Belt + Ball-screw spline
	Axis 4 (rotational axis)		AC servo motor with brake + Speed reducer + Belt + Spline
Motor capacity	Axis 1 (arm 1)	W	400
	Axis 2 (arm 2)	W	200
	Axis 3 (vertical axis)	W	200
	Axis 4 (rotational axis)	W	100
Movement range	Axis 1 (arm 1)	degree	±120
	Axis 2 (arm 2)	degree	±145
	Axis 3 (vertical axis) (*1)	mm	200 (Optional: 300)
	Axis 4 (rotational axis)	degree	±360
Maximum operating speed (*2)	Axis 1 + Axis 2 (maximum composite speed)	mm/sec	7121
	Axis 3 (vertical axis)	mm/sec	1393
	Axis 4 (rotational axis)	degree/sec	1200
Positioning repeatability (*3)	Axis 1 + Axis 2	mm	±0.010
	Axis 3 (vertical axis)	mm	±0.010
	Axis 4 (rotational axis)	degree	±0.005
Cycle time (*4)			0.54/2 kg
Load capacity	Rated	kg	2
	Maximum	kg	10
Push-in thrust of axis 3 (vertical axis)	Dynamic (*8)	N (kgf)	152 (15.5)
	Static (*9)	N (kgf)	108 (11.0)
Permissible load on axis 4	Permissible moment of inertia (*5)	$kg \cdot m^2$	0.06
	Permissible torque	N·m (kgf·cm)	3.3 (33.6)
Permissible tool diameter (*6)		mm	ϕ100
Origin detection			Absolute
User wiring			D-sub 25-pin connector with 25-core AWG26 shielded cable (socket)
Suction pipe joint			Applicable tube: Outer diameter ϕ12 (inner diameter ϕ8)
Alarm indicator (*7)			One small, red LED indicator (rated voltage: 24 V)
User piping			Two air tubes (outer diameter: ϕ6, inner diameter: ϕ4) (normal service pressure: 0.8 MPa) Two air tubes (outer diameter: ϕ4, inner diameter: ϕ2.5) (normal service pressure: 0.8 MPa)

Item			Specifications
Operating environment	Ambient temperature/humidity		Temperature: 0 to 40°C, humidity: 20 to 85%RH or less (non-condensing)
	Altitude	m	1,000 or less
Noise		dB	73
Robot weight		kg	32.5
Cleanliness class			Class 10 (0.1-μm base, with suction)
Suction rate (*10)			60
Controller	Power supply		230 V 50/60 Hz 8 A
	Allowable supply voltage fluctuation	%	±10
	Overvoltage category (IEC60664-1)		Category III
	Pollution degree (IEC60664-1)		Pollution degree 3

*1 To move the robot horizontally at high speed, perform teaching so that the vertical axis stays as close to the top position as possible. (Fig. 1)
To operate the robot with its vertical axis at the bottom position, the speed and acceleration must be reduced as appropriate. (Fig. 2)
*2 Assuming PTP instruction operation.
*3 Measured at a constant ambient temperature of 20°C.
*4 Measured when the robot is operated at the maximum speed, carrying a rated load of 2 kg.
*5 The permissible moment of inertia converted to a value at the rotational center of axis 4. The offset from the rotational center of axis 4 to the tool's center of gravity is assumed to be 50 mm or less. (Fig. 3)
If the tool's center of gravity is further away from the rotational center of axis 4, the speed and acceleration must be reduced as appropriate.
*6 If the tool exceeds the permissible diameter, it will contact the robot inside the robot's range of movement. (Fig. 4)
*7 To enable the alarm LED indicator, the user must provide a circuit that supplies 24 VDC to the LED terminal in the user connector in response to the controller I/O output signal, etc.
*8 A force of up to three times the dynamic push-in thrust may be applied at any given moment.
*9 The static thrust refers to thrust generated within the robot's range of operation based on a PAPR command.
*10 The level of dust generation will vary depending on the operation pattern. The suction rate may have to be raised if the robot is operated at high speed or high acceleration/deceleration.

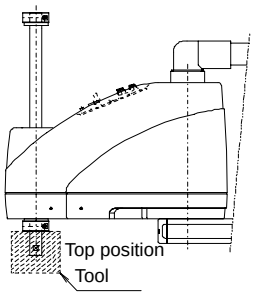

(Fig. 1)

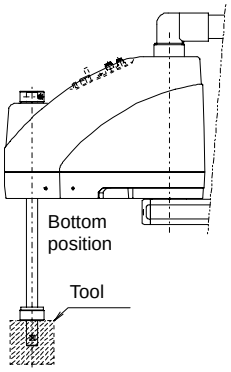

(Fig. 2)

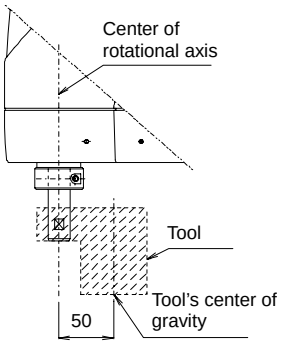

(Fig. 3)

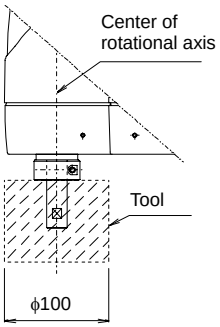

(Fig. 4)

Reference design standards: Annex I to Machine Directives, EN292-1, EN292-2, EN1050, EN60204-1, EN775

IX-NNC70□□ (Arm Length 700, Clean-room Specification)

Item			Specifications
Type			IX-NNC70□□-□□L-T1
Cleanliness class (*10)			Class 10 (0.1 μm)
Degree of freedom			Four degrees of freedom
Overall arm length		mm	700
Arm 1 length		mm	350
Arm 2 length		mm	350
Drive method	Axis 1 (arm 1)		AC servo motor + Speed reducer
	Axis 2 (arm 2)		AC servo motor + Speed reducer
	Axis 3 (vertical axis)		AC servo motor with brake + Belt + Ball-screw spline
	Axis 4 (rotational axis)		AC servo motor with brake + Speed reducer + Belt + Spline
Motor capacity	Axis 1 (arm 1)	W	750
	Axis 2 (arm 2)	W	400
	Axis 3 (vertical axis)	W	400
	Axis 4 (rotational axis)	W	200
Movement range	Axis 1 (arm 1)	degree	±125
	Axis 2 (arm 2)	degree	±145
	Axis 3 (vertical axis) (*1)	mm	200 (Optional: 400)
	Axis 4 (rotational axis)	degree	±360
Maximum operating speed (*2)	Axis 1 + Axis 2 (maximum composite speed)	mm/sec	6597
	Axis 3 (vertical axis)	mm/sec	1583
	Axis 4 (rotational axis)	degree/sec	1200
Positioning repeatability (*3)	Axis 1 + Axis 2	mm	±0.015
	Axis 3 (vertical axis)	mm	±0.010
	Axis 4 (rotational axis)	degree	±0.005
Cycle time (*4)			0.52
Load capacity	Rated	kg	5
	Maximum	kg	20
Push-in thrust of axis 3 (vertical axis)	Dynamic (*8)	N (kgf)	265 (27.0)
	Static (*9)	N (kgf)	188 (19.1)
Permissible load on axis 4	Permissible moment of inertia (*5)	$kg \cdot m^2$	0.1
	Permissible torque	N·m (kgf·cm)	6.7 (68.3)
Permissible tool diameter (*6)		mm	ϕ100
Origin detection			Absolute
User wiring			D-sub 25-pin connector with 25-core AWG26 shielded cable (socket)
Alarm indicator (*7)			One small, red LED indicator (rated voltage: 24 V)
User piping			Two air tubes (outer diameter: ϕ6, inner diameter: ϕ4) (normal service pressure: 0.8 MPa) Two air tubes (outer diameter: ϕ4, inner diameter: ϕ2.5) (normal service pressure: 0.8 MPa)

Item			Specifications
Operating environment	Ambient temperature/humidity		Temperature: 0 to 40°C, humidity: 20 to 85%RH or less (non-condensing)
	Altitude	m	1,000 or less
Noise		dB	74
Robot weight		kg	60
Controller	Power supply		230 V 50/60 Hz 15 A
	Allowable supply voltage fluctuation	%	±10
	Overvoltage category (IEC60664-1)		Category III
	Pollution degree (IEC60664-1)		Pollution degree 3

*1 To move the robot horizontally at high speed, perform teaching so that the vertical axis stays as close to the top position as possible. (Fig. 1)
To operate the robot with its vertical axis at the bottom position, the speed and acceleration must be reduced as appropriate. (Fig. 2)
*2 Assuming PTP instruction operation.
*3 Measured at a constant ambient temperature of 20°C.
*4 Measured when the robot is operated at the maximum speed, carrying a rated load of 5 kg.
*5 The permissible moment of inertia converted to a value at the rotational center of axis 4. The offset from the rotational center of axis 4 to the tool's center of gravity is assumed to be 50 mm or less. (Fig. 3)
If the tool's center of gravity is further away from the rotational center of axis 4, the speed and acceleration must be reduced as appropriate.
*6 If the tool exceeds the permissible diameter, it will contact the robot inside the robot's range of movement. (Fig. 4)
*7 To enable the alarm LED indicator, the user must provide a circuit that supplies 24 VDC to the LED terminal in the user connector in response to the controller I/O output signal, etc.
*8 A force of up to three times the dynamic push-in thrust may be applied at any given moment.
*9 The static thrust refers to thrust generated within the robot's range of operation based on a PAPR command.
*10 Based on a suction rate of 80 Nl/min (-100 mmAq).

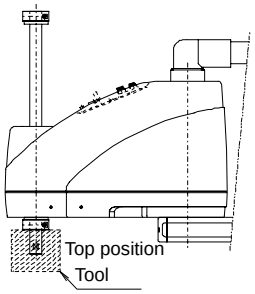

(Fig. 1)

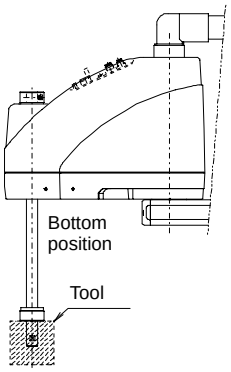

(Fig. 2)

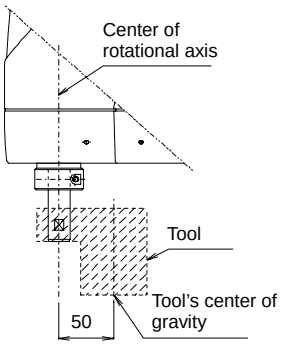

(Fig. 3)

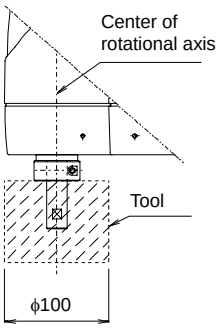

(Fig. 4)

Reference design standards: Annex I to Machine Directives, EN292-1, EN292-2, EN1050, EN60204-1, EN775

IX-NNC80□□ (Arm Length 800, Clean-room Specification)

Item			Specifications
Type			IX-NNC80□□-□□L-T1
Cleanliness class (*10)			Class 10 (0.1 μm)
Degree of freedom			Four degrees of freedom
Overall arm length		mm	800
Arm 1 length		mm	450
Arm 2 length		mm	350
Drive method	Axis 1 (arm 1)		AC servo motor + Speed reducer
	Axis 2 (arm 2)		AC servo motor + Speed reducer
	Axis 3 (vertical axis)		AC servo motor with brake + Belt + Ball-screw spline
	Axis 4 (rotational axis)		AC servo motor with brake + Speed reducer + Belt + Spline
Motor capacity	Axis 1 (arm 1)	W	750
	Axis 2 (arm 2)	W	400
	Axis 3 (vertical axis)	W	400
	Axis 4 (rotational axis)	W	200
Movement range	Axis 1 (arm 1)	degree	±125
	Axis 2 (arm 2)	degree	±145
	Axis 3 (vertical axis) (*1)	mm	200 (Optional: 400)
	Axis 4 (rotational axis)	degree	±360
Maximum operating speed (*2)	Axis 1 + Axis 2 (maximum composite speed)	mm/sec	7121
	Axis 3 (vertical axis)	mm/sec	1583
	Axis 4 (rotational axis)	degree/sec	1200
Positioning repeatability (*3)	Axis 1 + Axis 2	mm	±0.015
	Axis 3 (vertical axis)	mm	±0.010
	Axis 4 (rotational axis)	degree	±0.005
Cycle time (*4)			0.52
Load capacity	Rated	kg	5
	Maximum	kg	20
Push-in thrust of axis 3 (vertical axis)	Dynamic (*8)	N (kgf)	265 (27.0)
	Static (*9)	N (kgf)	188 (19.1)
Permissible load on axis 4	Permissible moment of inertia (*5)	$kg \cdot m^2$	0.1
	Permissible torque	N·m (kgf·cm)	6.7 (68.3)
Permissible tool diameter (*6)		mm	ϕ100
Origin detection			Absolute
User wiring			D-sub 25-pin connector with 25-core AWG26 shielded cable (socket)
Alarm indicator (*7)			One small, red LED indicator (rated voltage: 24 V)
User piping			Two air tubes (outer diameter: ϕ6, inner diameter: ϕ4) (normal service pressure: 0.8 MPa) Two air tubes (outer diameter: ϕ4, inner diameter: ϕ2.5) (normal service pressure: 0.8 MPa)

Item			Specifications
Operating environment	Ambient temperature/humidity		Temperature: 0 to 40°C, humidity: 20 to 85%RH or less (non-condensing)
	Altitude	m	1,000 or less
Noise		dB	74
Robot weight		kg	62
Controller	Power supply		230 V 50/60 Hz 15 A
	Allowable supply voltage fluctuation	%	±10
	Overvoltage category (IEC60664-1)		Category III
	Pollution degree (IEC60664-1)		Pollution degree 3

*1 To move the robot horizontally at high speed, perform teaching so that the vertical axis stays as close to the top position as possible. (Fig. 1)
To operate the robot with its vertical axis at the bottom position, the speed and acceleration must be reduced as appropriate. (Fig. 2)
*2 Assuming PTP instruction operation.
*3 Measured at a constant ambient temperature of 20°C.
*4 Measured when the robot is operated at the maximum speed, carrying a rated load of 5 kg.
*5 The permissible moment of inertia converted to a value at the rotational center of axis 4. The offset from the rotational center of axis 4 to the tool's center of gravity is assumed to be 50 mm or less. (Fig. 3)
If the tool's center of gravity is further away from the rotational center of axis 4, the speed and acceleration must be reduced as appropriate.
*6 If the tool exceeds the permissible diameter, it will contact the robot inside the robot's range of movement. (Fig. 4)
*7 To enable the alarm LED indicator, the user must provide a circuit that supplies 24 VDC to the LED terminal in the user connector in response to the controller I/O output signal, etc.
*8 A force of up to three times the dynamic push-in thrust may be applied at any given moment.
*9 The static thrust refers to thrust generated within the robot's range of operation based on a PAPR command.
*10 Based on a suction rate of 80 Nl/min (-100 mmAq).

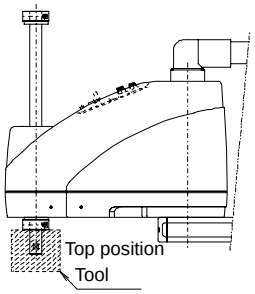

(Fig. 1)

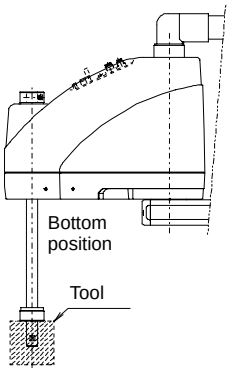

(Fig. 2)

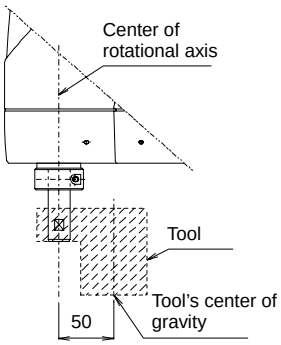

(Fig. 3)

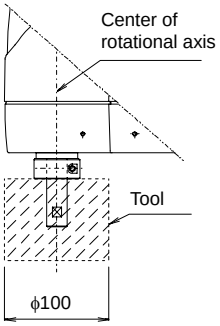

(Fig. 4)

Reference design standards: Annex I to Machine Directives, EN292-1, EN292-2, EN1050, EN60204-1, EN775

7.2 External Dimensions

IX-NNC50□□

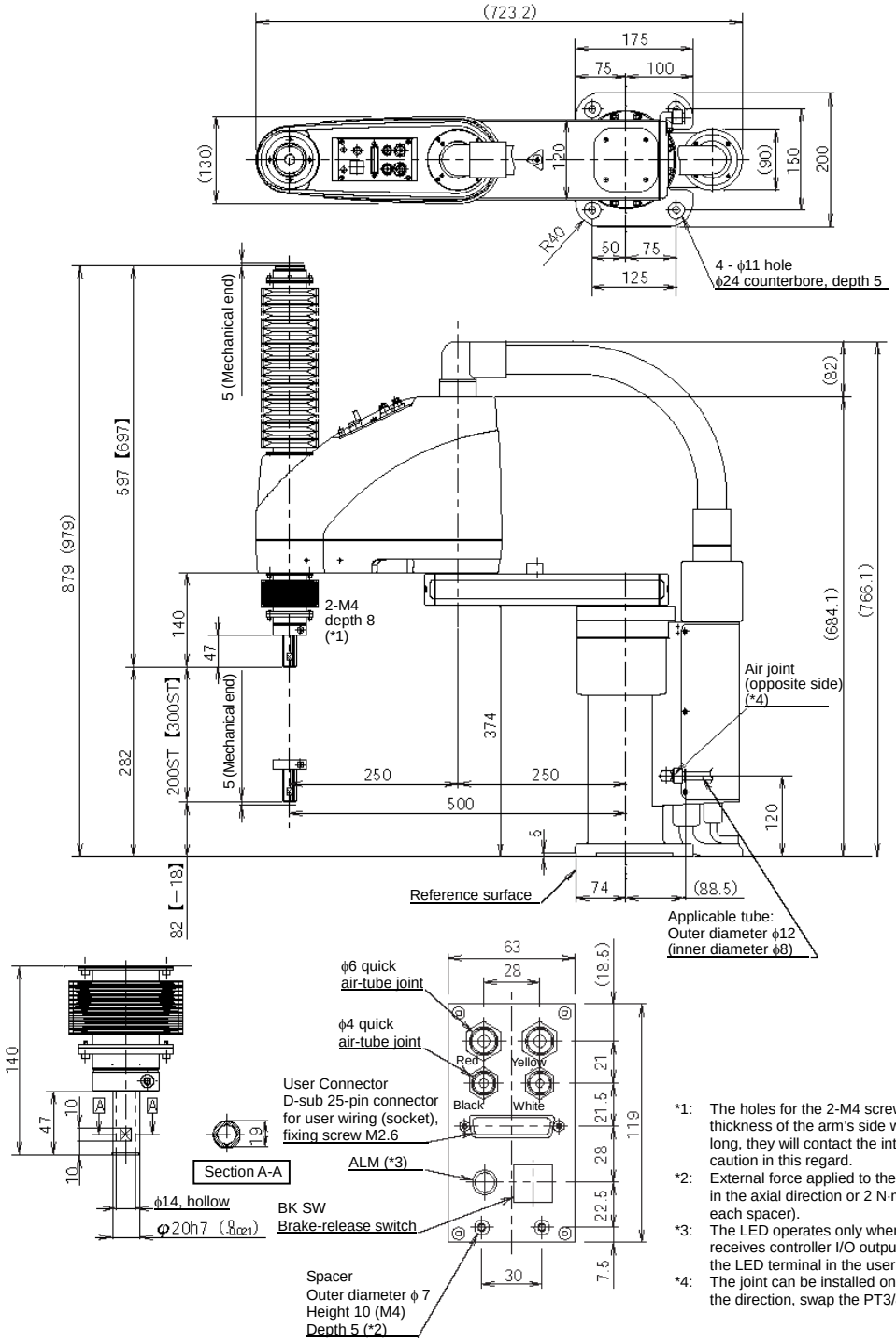

*1: The holes for the 2-M4 screws (depth 8) pierce through the thickness of the arm's side wall. If the mounting screws are long, they will contact the internal parts. Exercise due caution in this regard.

*2: External force applied to the spacers must not exceed 30 N in the axial direction or 2 N·m in the rotating direction (for each spacer).

*3: The LED operates only when the user provides a circuit that receives controller I/O output signal and supplies 24 VDC to the LED terminal in the user connector.

*4: The joint can be installed on the opposite side. (To reverse the direction, swap the PT3/8 plug and the joint.)

Detailed view of panel (1/2)

IX-NNC60□□

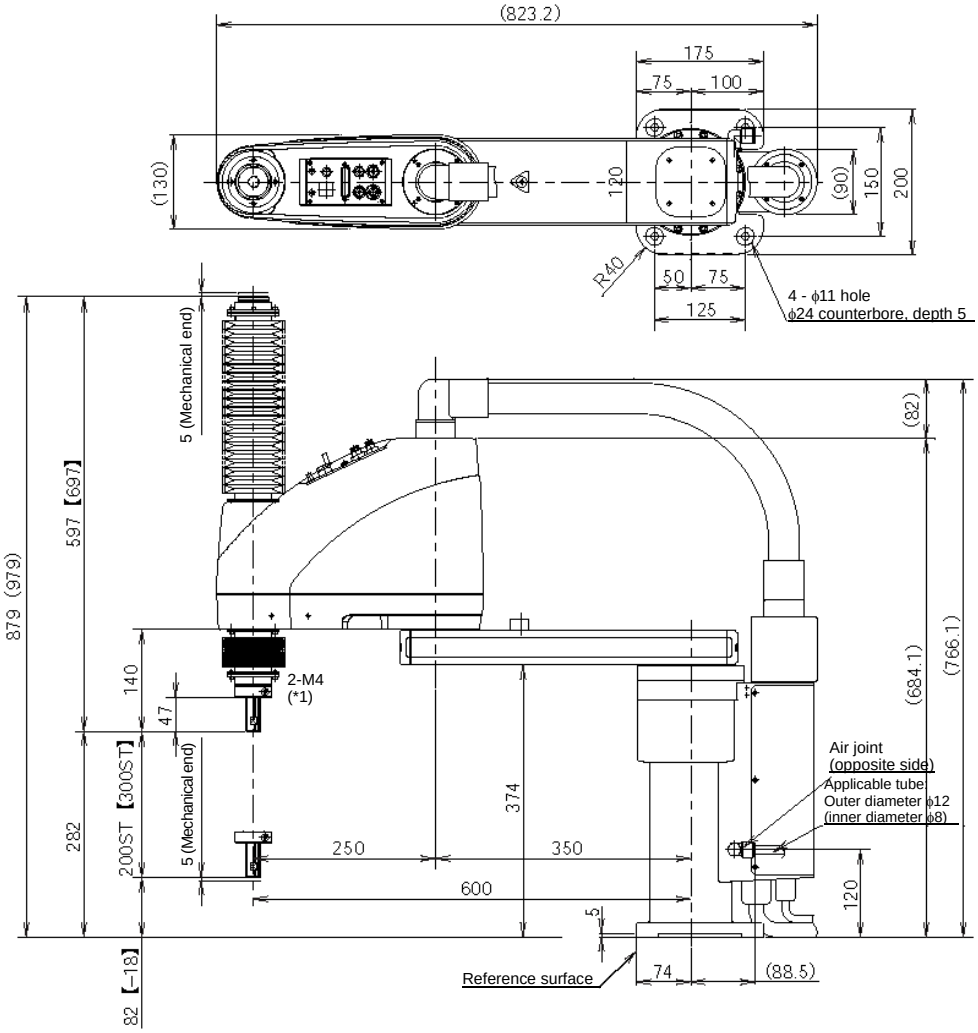

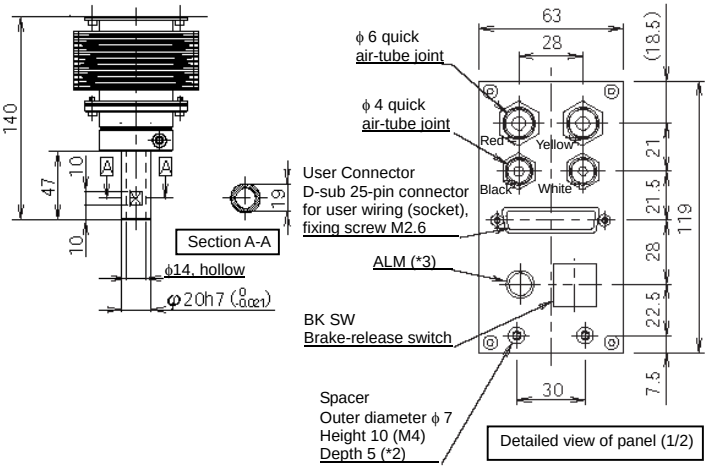

*1: The holes for the 2-M4 screws (depth 8) pierce through the thickness of the arm's side wall. If the mounting screws are long, they will contact the internal parts. Exercise due caution in this regard.

*2: External force applied to the spacers must not exceed 30 N in the axial direction or 2 N·m in the rotating direction (for each spacer).

*3: The LED operates only when the user provides a circuit that receives controller I/O output signal and supplies 24 VDC to the LED terminal in the user connector.

IX-NNC70□□

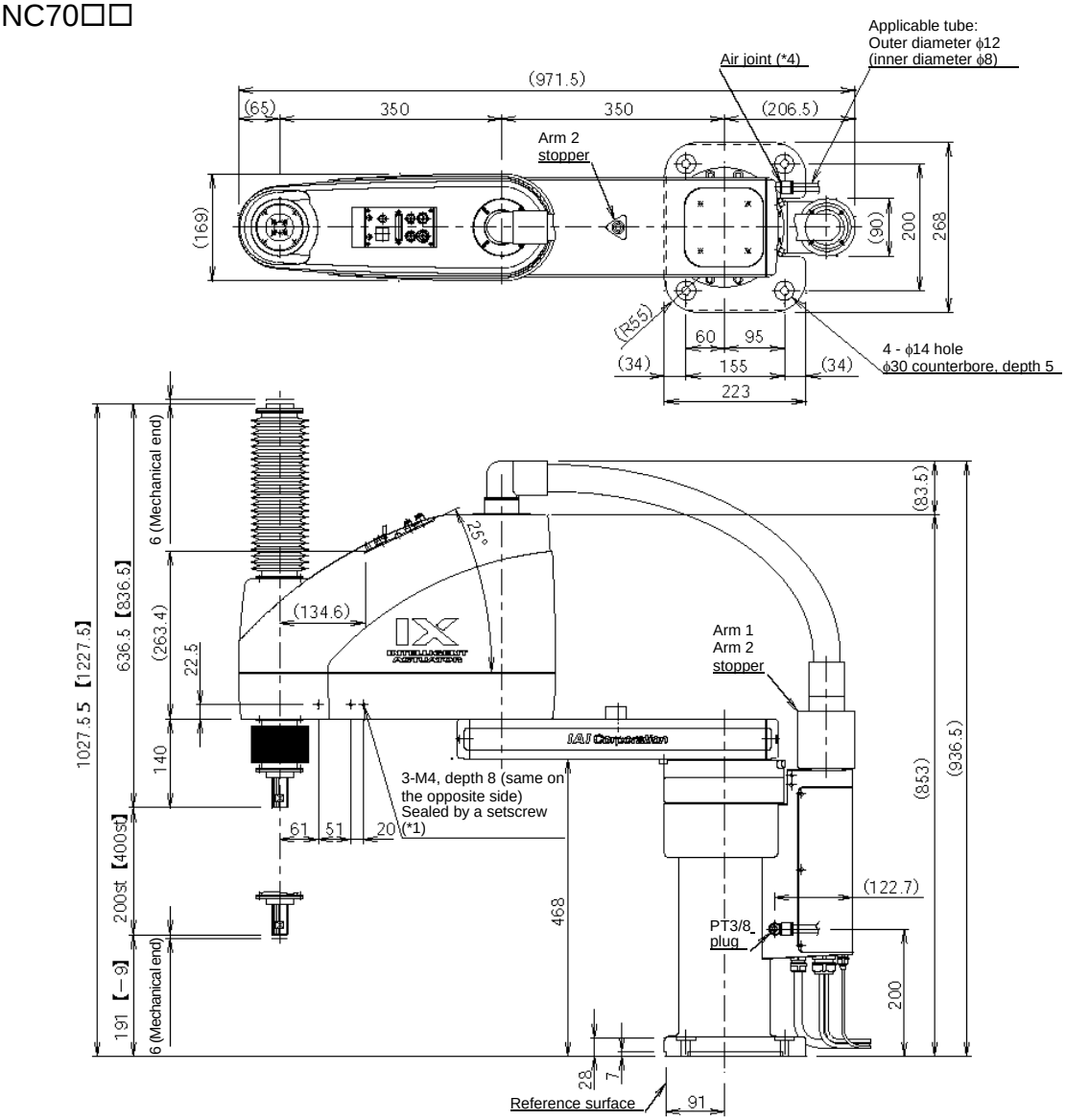

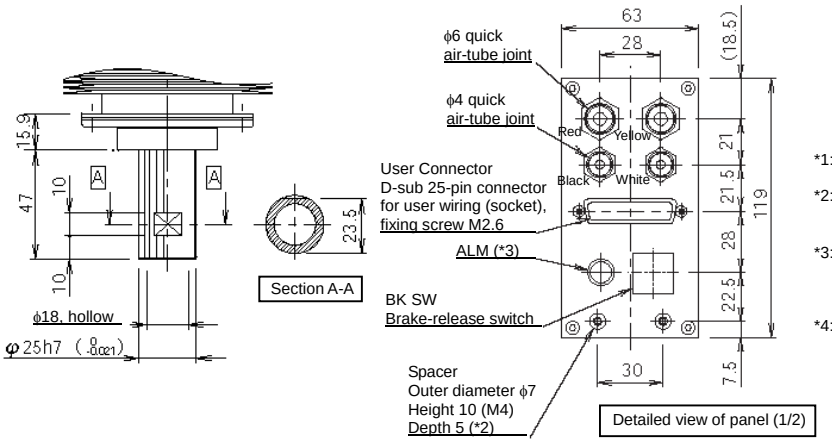

*1: The holes for the 3-M4 screws (depth 8) pierce through the thickness of the arm's side wall.
*2: External force applied to the spacers must not exceed 30 N in the axial direction or 2 N·m in the rotating direction (for each spacer).
*3: The LED operates only when the user provides a circuit that receives controller I/O output signal and supplies 24 VDC to the LED terminal in the user connector.
*4: The joint can be installed on the opposite side. (To reverse the direction, swap the PT3/8 plug and the joint.)

IX-NNC80□□

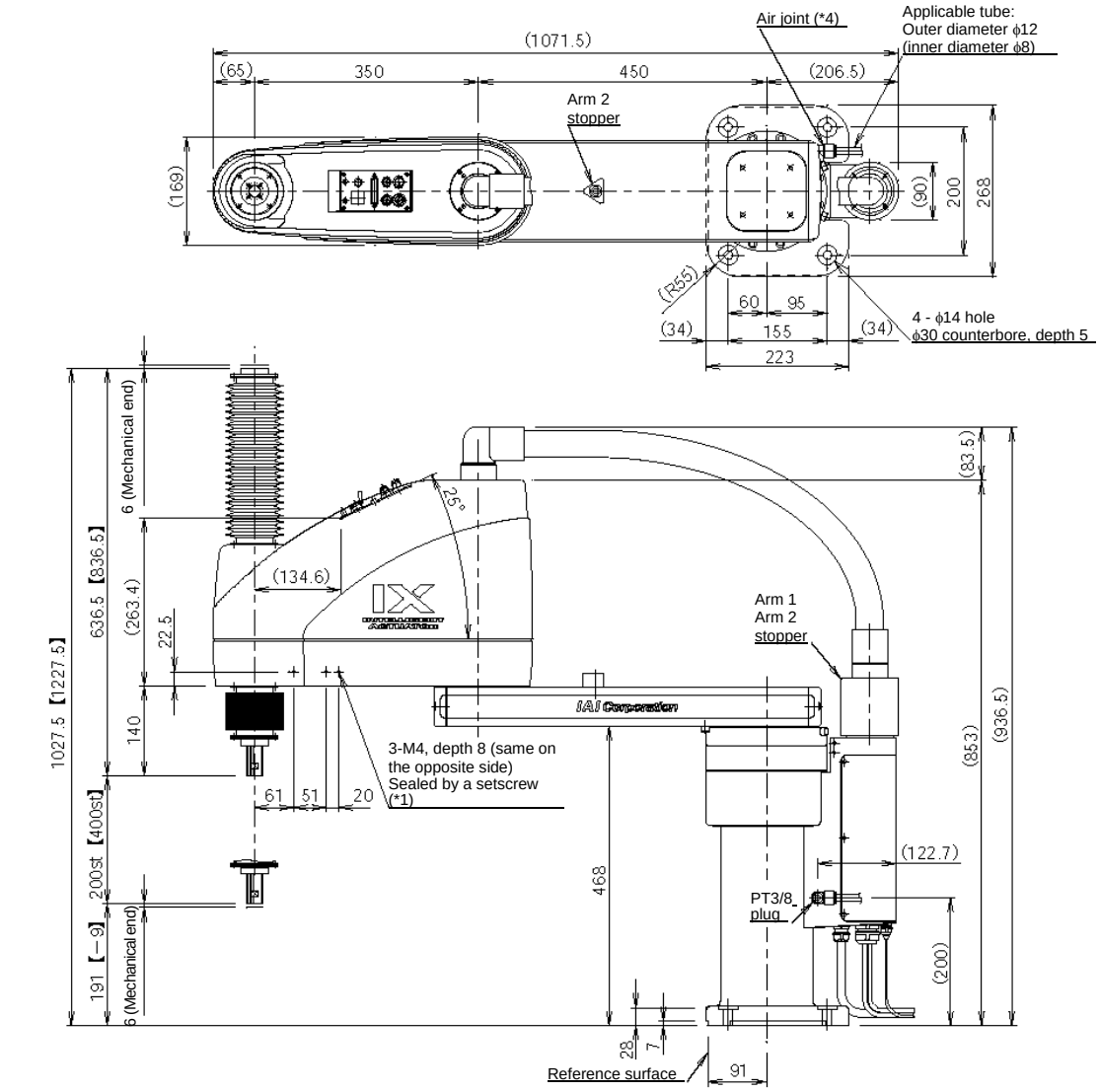

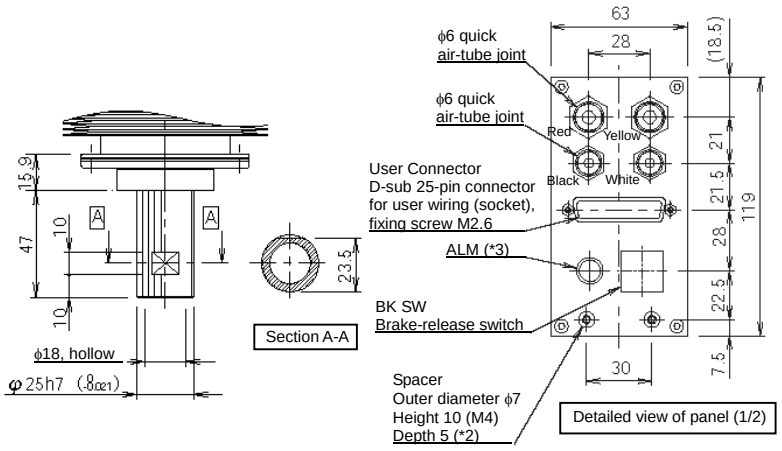

*1: The holes for the 3-M4 screws (depth 8) pierce through the thickness of the arm's side wall.

*2: External force applied to the spacers must not exceed 30 N in the axial direction or 2 N·m in the rotating direction (for each spacer).

*3: The LED operates only when the user provides a circuit that receives controller I/O output signal and supplies 24 VDC to the LED terminal in the user connector.

*4: The joint can be installed on the opposite side. (To reverse the direction, swap the PT3/8 plug and the joint.)

7.3 Robot Operation Area

IX-NNC50□□

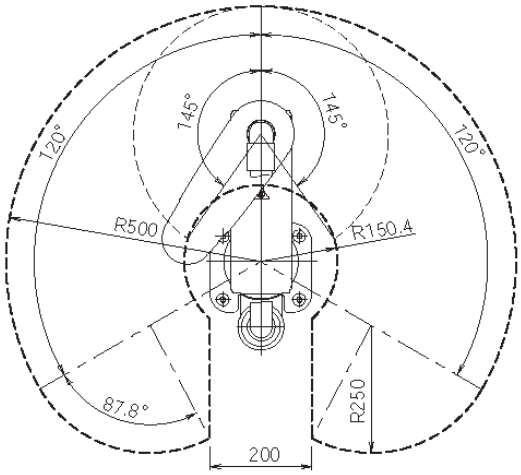

(Operation prohibited area)

Movement range

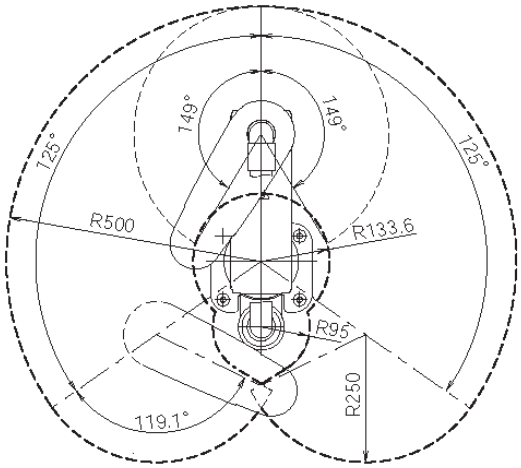

Stopper position range

IX-NNC60□□

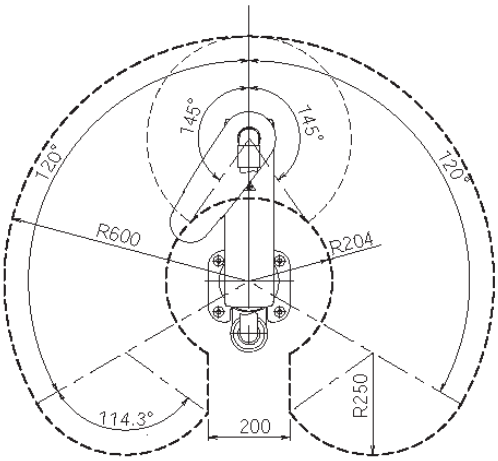

(Operation prohibited area)

Movement range

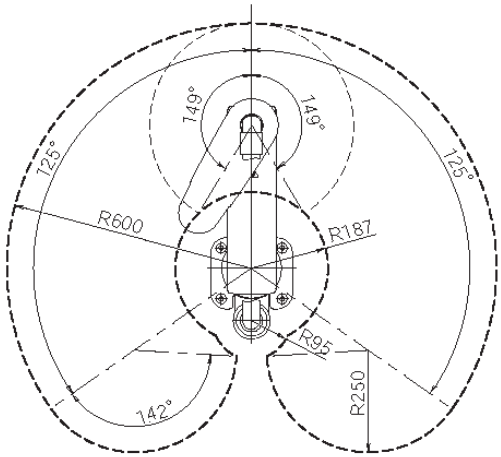

Stopper position range

IX-NNC70□□

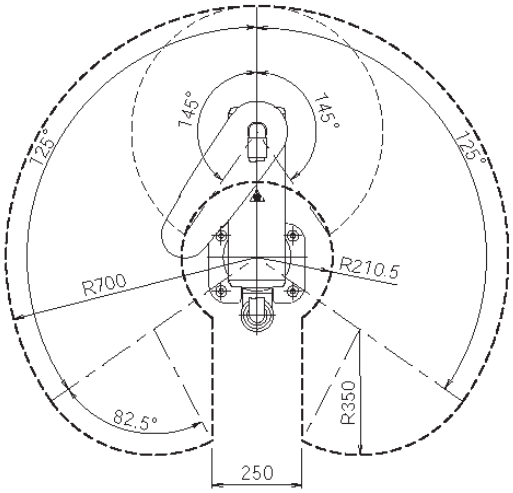

(Operation prohibited area)

Movement range

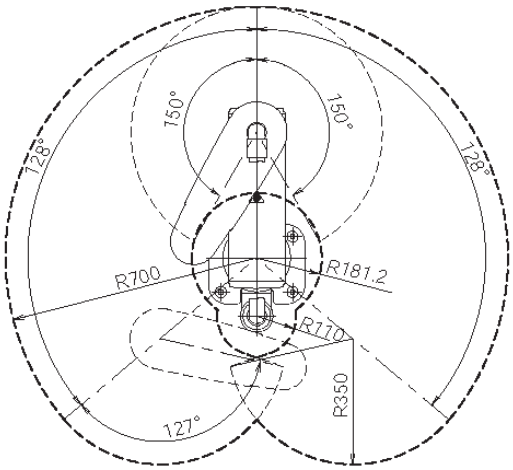

Stopper position range

IX-NNC80□□

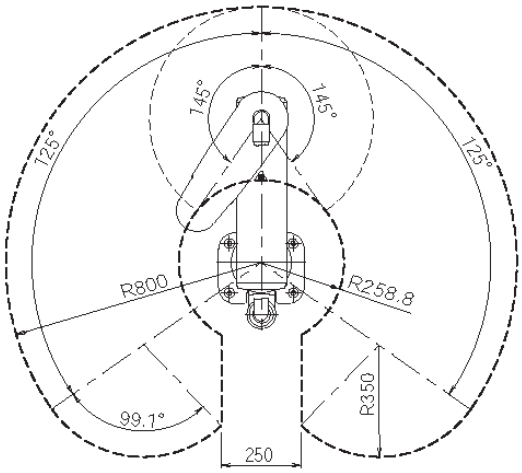

(Operation prohibited area)

Movement range

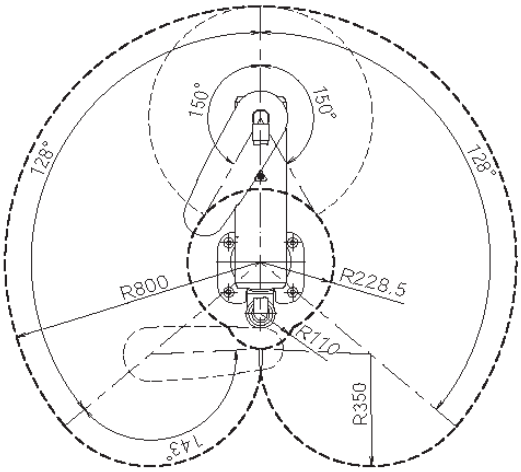

Stopper position range

Wiring/Piping Diagram (Arm Length: 500/600)

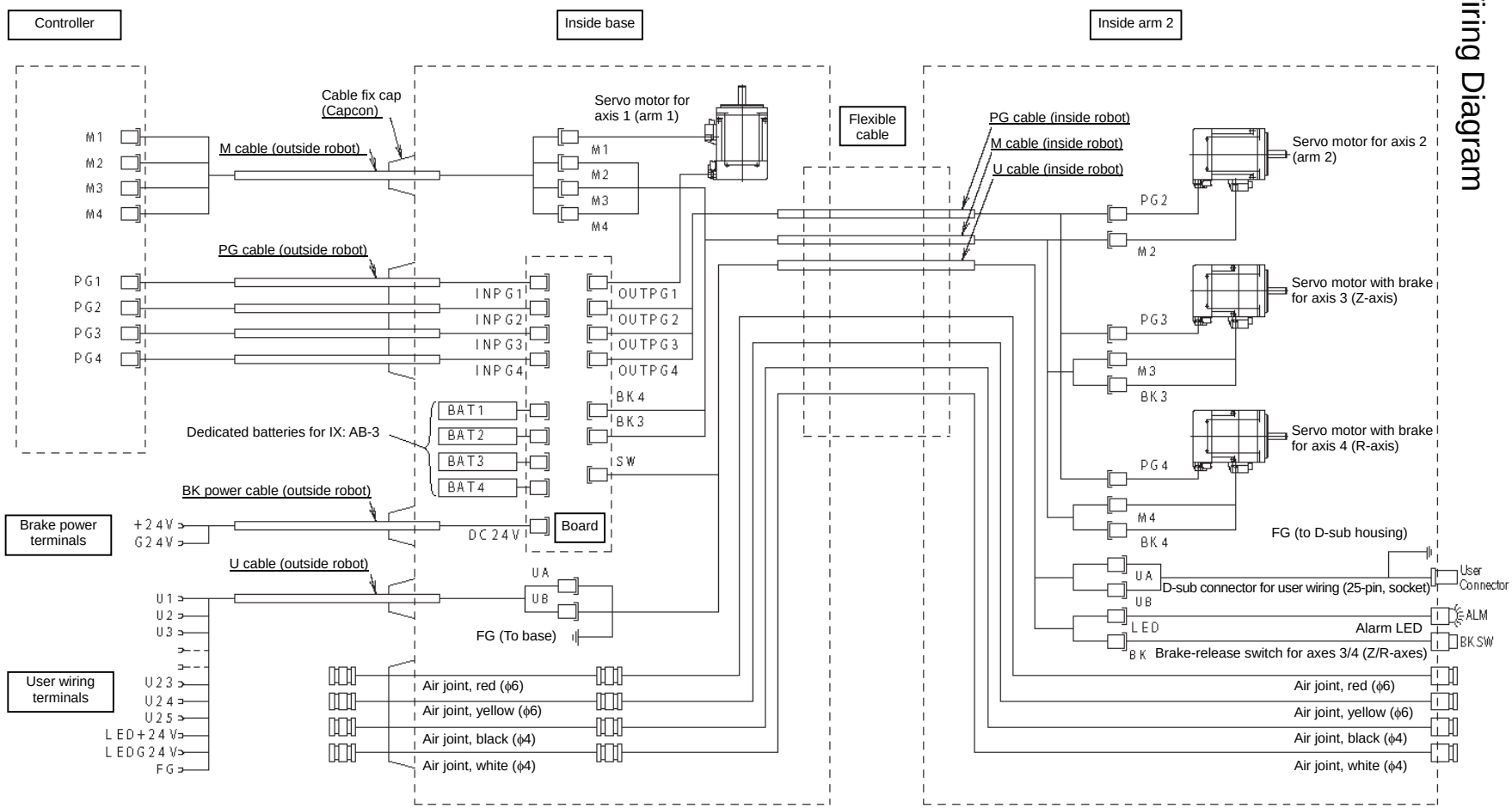

Notes

(1) The actual layout of board connectors varies from this drawing.

(2) Since the brake power circuit is provided on the primary side (high-voltage side), a dedicated 24 V power supply is required for this circuit. The 24 V power supply for I/O circuits used on the secondary side (low-voltage side) cannot be shared.

(3) To operate the alarm LED, the user must provide a circuit that uses the controller I/O output signal.

7.5 230V Circuit Components

IX-NNC50□□/60□□

No.	Code name	Model	Manufacturer	Remarks
1	Axis 1 servo motor	TS4609 N2027 E200	Tamagawa Seiki	AC servo motor, □ 60, 400 W, key groove, CE certified
2	Axis 2 servo motor	TS4607 N2027 E200		AC servo motor, □ 60, 200 W, key groove, CE certified
3	Axis 3 servo motor w/ brake	TS4607 N7027 E200		AC servo motor, □ 60, 200 W, w/ brake, round shaft, CE certified
4	Axis 4 servo motor w/ brake	TS4606 N7027 E200		AC servo motor, □ 60, 100 W, key groove, CE certified
5	M cable (inside robot)		IAI	Wire: 300 V, 105°C (rated), AWG18 (0.84 mm^2), flexible cable, UL VW-1, c-UL FT-1
6	M cable (outside robot)		IAI	Wire: 300 V, 80°C (rated), AWG18 (0.89 mm^2), oil-resistant cable, UL VW-1, c-UL FT-1

IX-NNC70□□/80□□

No.	Code name	Model	Manufacturer	Remarks
1	Axis 1 servo motor	TS4614 N2027 E200	Tamagawa Seiki	AC servo motor, □ 80, 750 W, key groove, CE certified
2	Axis 2 servo motor	TS4609 N2027 E200		AC servo motor, □ 60, 400 W, key groove, CE certified
3	Axis 3 servo motor w/ brake	TS4609 N7027 E200		AC servo motor, □ 60, 400 W, w/ brake, round shaft, CE certified
4	Axis 4 servo motor w/ brake	TS4607 N2027 E200		AC servo motor, □ 60, 200 W, key groove, CE certified
5	M cable (inside robot)		IAI	Wire: 300 V, 105°C (rated), AWG18 (0.84 mm^2), flexible cable, UL VW-1, c-UL FT-1
6	M cable (outside robot)		IAI	Wire: 300 V, 80°C (rated), AWG18 (0.89 mm^2), oil-resistant cable, UL VW-1, c-UL FT-1

8 Contacting Us

This product has been designed and manufactured by incorporating all possible measures and quality controls. However, should you find any defect, or if you have any question regarding the handling of the product, please contact IAI.

IAI Corporation
645-1 Shimizu Hirose, Shizuoka City, Shizuoka Prefecture 424-0102 Japan
TEL: 0543-64-5105 FAX: 0543-64-5182

IAI America, Inc.
2690 W. 237th Street, Torrance, CA 90505
TEL: (310) 891-6015 FAX: (310) 891-0815
Email: techsupport@iaius.com

IAI Industrieroboter GmbH
Ober der Röth 4, D-65824 Schwalbach am Taunus, Germany
TEL: 06196-88950 FAX: 06196-889524

Catalog No.: IX-MJ3628-1A-Sep0205-2

Quality and Innovation

IAI America, Inc.

Head Office: 2690 W. 237th Street, Torrance, CA 90505
TEL (310) 891-6015 FAX (310) 891-0815
Chicago Office: 1261 Hamilton Parkway, Itasca, IL 60143
TEL (630) 467-9900 FAX (630) 467-9912
New Jersey Office: 7 South Main St., Suite-F, Marlboro, NJ 07746
TEL (732) 683-9101 FAX (732) 683-9103

Website: www.intelligentactuator.com

IAI Industrieroboter GmbH

Ober der Röth 4, D-65824 Schwalbach am Taunus, Germany
TEL 06196-88950 FAX 06196-889524

The information contained in this document is subject to change without notice for purposes of product improvement.
Copyright © 2004. Aug. IAI Corporation. All rights reserved.